LINXON

Translation of the original operating manual

LX218

Leak Detector

Catalog No.
8200-000, 8200-001, 8200-002, 8200-003, 8200-004, 8200-004

From software version
1.18

klna89en1-08-(2011)

LINXON is a brand of INFICON GmbH

INFICON GmbH

Bonner Strasse 498

50968 Cologne, Germany

Table of Contents

1 About this manual ... 6

1.1 Target groups ... 6

1.2 Warnings ... 6

2 Safety ... 7

2.1 Intended use ... 7

2.2 Duties of the operator ... 8

2.3 Owner requirements ... 9

2.4 Dangers ... 10

3 Shipment, Transport, Storage ... 11

4 Description ... 13

4.1 Function ... 13

4.2 Operation modes ... 13

4.2.1 Operation mode "Vacuum" ... 13

4.2.2 Operation mode "Sniffing" ... 13

4.3 Device setup ... 14

4.3.1 Overall device ... 14

4.3.2 Control unit ... 16

4.3.2.1 START button ... 17

4.3.2.2 STOP button ... 17

4.3.2.3 ZERO button ... 17

4.3.2.4 Meaning of the function symbols ... 17

4.3.2.5 Structure of the display and menu ... 18

4.3.2.6 Measuring screen layout ... 19

4.3.3 Vacuum connections ... 19

4.3.3.1 Inlet ... 19

4.3.3.2 Exhaust gas connection ... 20

4.3.3.3 Venting connection ... 20

4.3.4 Connections for accessories and control signals ... 21

4.4 Technical data ... 27

4.4.1 General data ... 27

4.4.2 Data on power connections ... 28

4.4.3 Ambient conditions ... 28

4.4.4 Measurement data ... 29
4.4.5 Data for the turbo pump ... 30
5 Installation ... 31
5.1 Setup ... 31
5.2 Connecting to the power supply system ... 33
5.3 Checking the operation of the device ... 33
5.4 Connecting an external backing pump ... 35
6 Operation ... 36
6.1 Switching on ... 36
6.2 Standby ... 36
6.3 Basic settings ... 37
6.3.1 Global settings ... 37
6.3.1.1 Setting the display ... 38
6.3.1.2 Access control ... 41
6.3.1.3 Loading/saving parameters ... 43
6.3.1.4 Volume and beeping ... 44
6.4 Settings for the measurements ... 44
6.4.1 Selecting the operation mode and mass ... 44
6.4.2 Setting filter and ZERO ... 45
6.4.3 Setting vacuum ranges ... 47
6.4.4 Setting the evacuation time and ventilation ... 48
6.4.5 Setting gross leak protection ... 49
6.4.6 Setting pressure limits for operation mode "Sniffing" ... 50
6.4.7 Setting the setpoint and alarm ... 50
6.4.8 Defining the calibration settings ... 51
6.4.9 Setting the calibration request ... 52
6.4.10 Calibrating ... 52
6.4.10.1 Calibrating in the operation mode "Vacuum" ... 52
6.4.10.2 Calibrating in the operation mode "Sniffing" ... 55
6.4.10.3 Checking the calibration using the internal calibration leak ... 55
6.5 Measuring ... 57
6.5.1 Measuring in the operation mode "Vacuum" ... 57
6.5.2 Measuring in the operation mode "Sniffing" ... 57
6.5.3 Measurement view ... 58
6.6 Calling up information about the device ... 58

6.7 Calibrating with vacuum method ... 60
6.8 Calibrating with sniff method ... 63
6.9 Check internal calibration leak ... 65
6.10 Switching off the device ... 65
7 Warning and error messages ... 66
8 Cleaning and maintenance ... 77
8.1 Cleaning/replacing the filter mat for fan 1 ... 78
8.2 Replacing power fuses ... 79
9 Decommissioning the measuring instrument ... 80
9.1 Sending in the device ... 80
10 Accessories ... 82
10.1 Appendix ... 82
11 Appendix ... 84
11.1 Menu path ... 84
11.1.1 Run-up ... 84
11.1.2 Standby ... 84
11.1.2.1 Configuration ... 84
11.1.2.2 Calibration ... 86
11.2 CE Declaration of Conformity ... 87
Index ... 89

1 About this manual

This document applies to the software version stated on the title page.

Product names may occur in the document, which are added for identification purposes only and belong to the respective owner of the rights.

1.1 Target groups

This instruction manual is intended for the operator of the device and at technically qualified specialists, with experience in the field of leak testing technology.

1.2 Warnings

⚠ DANGER

Imminent hazard resulting in death or serious injuries

⚠ WARNING

Hazardous situation resulting in potential death or serious injuries

⚠ CAUTION

Hazardous situation resulting in minor injuries

NOTICE

Hazardous situation resulting in damage to property or the environment

2 Safety

2.1 Intended use

The device is a leak detector for detecting and measuring leaks in test objects. The device is suitable for leak detection using the vacuum method and the sniffer method.

- Operate the device only according to this instruction manual.
- Comply with application limits, see "Technical Data".

Misapplications

Avoid the following, non-intended uses:

- Use outside the technical specifications, see "Technical Specifications"
- Use in radioactive areas
- Use of accessories or spare parts, which are not included in this instruction manual
- Test of wet or damp test objects
- Pumping off aggressive, flammable, explosive, corrosive, microbiological, reactive or toxic substances, creating a hazard
- Pumping down of condensible fluids and vapors
- Pumping down of gases contaminated with particles
- Shock loads or vibrations
- Pumping hydrogen concentrations, which can explode in combination with oxygen. The allowable composition of venal gas mixtures can be read in the safety data sheets of the respective manufacturers.
- Using the device in potentially explosive atmospheres
- Inspecting electrically live conductors or objects with a sniffer line
- Sudden venting of vacuum systems
- Using the device as a seat or step
- Connecting non-vacuum-resistant workpieces or test objects without splinter protection
- Pumping out gases containing halogens such as fluorine or chlorine in high concentration or over a long period of time. Use with refrigerants or SF6.
- Operation without exhaust pipe in poorly ventilated rooms, depending on the type of gases used

Note: This device is not intended to be used in living areas.

2.2 Duties of the operator

- Read, observe, and follow the information in this manual and in the work instructions provided by the owner. This concerns in particular the safety and warning instructions.
- Always observe the complete operating instructions for all work.
- If you have any questions about operation or maintenance that are not answered in this manual, contact customer service.

2.3 Owner requirements

The following notes are for companies or any person who is responsible for the safety and effective use of the product by the user, employees or third parties.

Safety-conscious operation

- Operate the device only if it is in perfect technical condition and has no damage.
- Only operate the device properly in accordance with this instruction manual, in a safety and risk conscious manner.
- Adhere to the following regulations and observe their compliance:
  - Intended use
  - Universally valid safety and accident prevention regulations
  - International, national and local standards and guidelines
  - Additional device-related provisions and regulations
- Only use original parts or parts approved by the manufacturer.
- Keep this instruction manual available on site.

Personnel qualifications

- Only instructed personnel should be permitted to work with and on the device. The instructed personnel must have received training on the device.
- Make sure that authorized personnel have read and understood the instruction manual and all other applicable documents.

2.4 Dangers

The measuring instrument was built according to the state-of-the-art and the recognized safety regulations. Nevertheless, improper use may result in risk to life and limb on the part of the user or third parties, or damage to the unit or other property may occur.

Dangers from electric power

There is a danger to life from the contact of conductive parts inside the device.

- Disconnect the device from the power supply prior to any installation and maintenance work. Make sure that the electric power supply cannot reconnected without authorization.

The device contains electric components that can be damaged from high electric voltage.

- Before connecting the device to the power supply, make sure that the supply voltage specified on the device is the same as the local power supply.

Explosion hazard

Hydrogen is a flammable and explosive gas.

- Use only tracer gases with a concentration of hydrogen that cannot explode in combination with oxygen. The allowable composition of venal gas mixtures can be read in the safety data sheets of the respective manufacturers.

Danger from suction effect at the inlet flange

When operating the device in operation mode Vacuum there will be a negative pressure created at the inlet flange. The suction effect on hands or other body parts can cause injuries or trigger uncontrolled movements from a person being frightened.

- Pay special attention to this danger when using a remote control!
- Make sure that no objects get into the inlet.
- Connect the inlet flange with a test rig or seal it off using a blank flange.

Injury from bursting objects

There is risk of injury from bursting objects causes by a test object notwithstanding the vacuum pressure when a test object is connected.

- Take appropriate precautions.

Risk of injury from slipping off or falling down

- Place the device only on surfaces that are not tilted.
- Do not lift or carry the device by yourself.

3 Shipment, Transport, Storage

Item	Quantity
LINXON LX218	1
Power cable	1
Replacement filter for fan	1
Set of fuses	1
Centering ring DN 25 ISO-KF	1
Power Subcon plug and housing for D-Sub plug	1
Adapter for ventilation connection	1
Instruction manual	1
Unpacking instructions	1
Inspection certificate calibration leak	1
Inspection certificate leak detector	1

Transport

NOTICE

Material damage due to leaked oil

If an oil-sealed pump is installed in the device, the oil may leak if you turn it more than 90 degrees. Hold the device upright.

⚠ CAUTION

Risk of injury from lifting the heavy device

The device is heavy and can slip out of hand.

- Lift and transport the device only with two people.
- To lift get hold below the floor panel.

NOTICE

Material damage if incorrect transport packaging is used

Transport over long distances

- Keep the original packaging.
- Only transport the device in its original packaging.

Storage

Store the device under consideration of the technical data; see "Technical data".

See also

Inlet [▸ 19]

4 Description

4.1 Function

The device is a leak detector for detecting and measuring leaks in test objects. The device is suitable for leak detection using the vacuum method and the sniffer method.

- When using the vacuum method the test object is evacuated and subjected to helium or forming gas from the outside. To do this it is necessary to establish a vacuum connection between the device and the test object.
- When using the sniffer method an overpressure is established in the test object using helium or a forming gas. The test object is then inspected on the outside using a sniffer line.

4.2 Operation modes

4.2.1 Operation mode "Vacuum"

The inlet flange is located on the upper side of the device.

To be able to calibrate using the vacuum mode a suitable external calibration leak must be mounted on inlet flange. See also "Calibrating in the operation mode "Vacuum" [▸ 52]".

To be able to perform leak detection using the vacuum method the inlet flange must be connected to the desired test object.

If the pressure in the specimen is less than the surrounding pressure, then helium (which is sprayed over the specimen) can penetrate into the specimen if there is a leak. Helium can be detected in the leak detector using a mass spectrometer.

4.2.2 Operation mode "Sniffing"

You can connect a sniffer line to the device.

Using a sniffer line, you can suck gas into the device to be used for detection.

To scan test objects under overpressure, use the sniffer line.

Connect the sniffer line to the back of the device, see "Connections for accessories and control signals [▸ 21]". This connector is used both to connect the sniffer line and to connect the ventilation line.

4.3 Device setup

4.3.1 Overall device

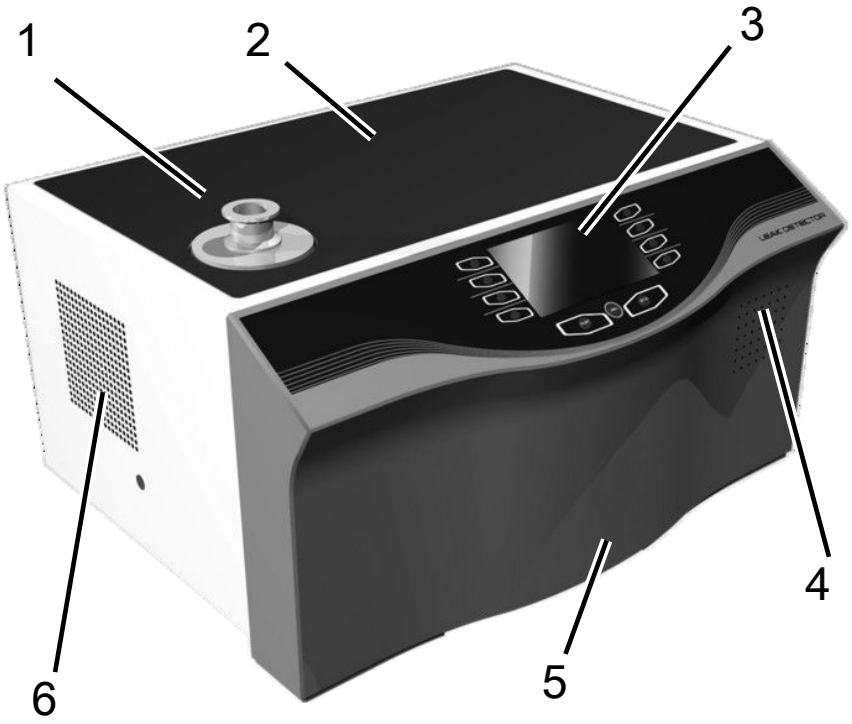

Fig. 1: Front view

1	Inlet flange	2	Storage space
3	Operating unit	4	Speaker
5	Front hood	6	Fan opening

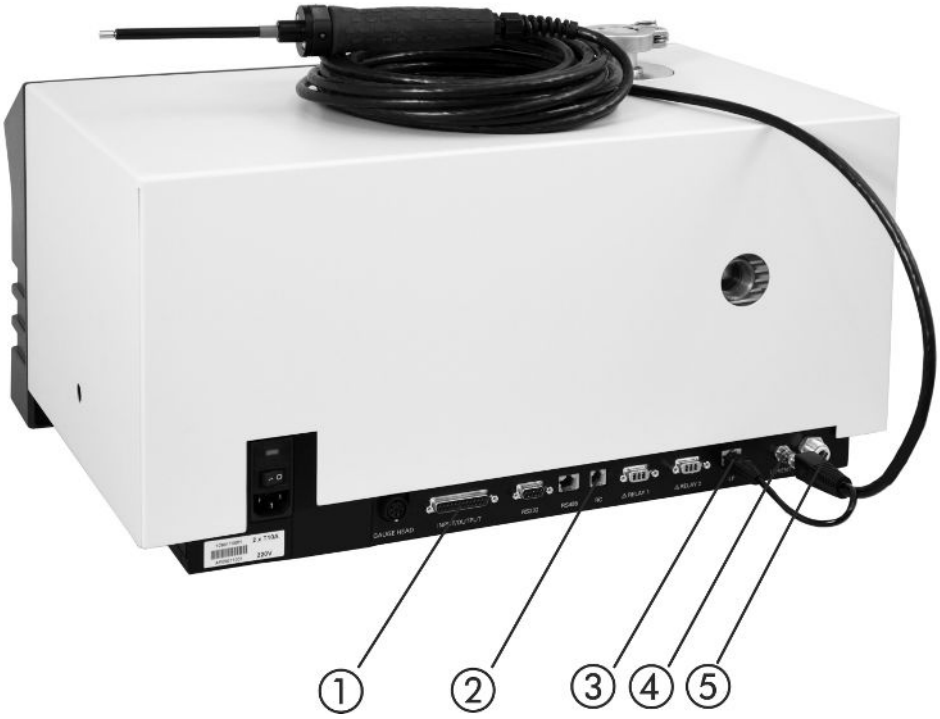

Fig. 2: Back view

1	INPUT/OUTPUT	2	Remote control connection
3	Electrical connection for the sniffer line	4	Gas connection for the sniffer line or the ventilation line (hose nipple Ø 6/4 mm)
5	Exhaust gas connection (¼‘‘ quick-change connector for hose Ø 8.6 mm)		

4.3.2 Control unit

Fig. 3: Control unit

The control unit consists of a display and a control panel.

1	Display	The display shows measured values, operation modes, device parameters and their values as well as the meaning of the buttons.
2	Option buttons	The function of these buttons depends on the current operating state. The particular meaning appears on the display.
3	STOP button	STOP stops the measurement operation.
4	ZERO button	ZERO activates background suppression in the measuring mode. If the button is pressed for more than 3 seconds, background suppression will be disabled.
5	START button	START starts the measurement operation.

- Switch between the windows by clicking the option buttons on the left and right side of the display.

- If a value is selected in the windows, you can modify the selected processing position with the button on the left side.
- If multiple values are present in the row, press the button on the left side again.
- You can change selected values at the edit position using the "+" or "-" buttons. If you hold down the "+" or "-" buttons, the values change continuously in ascending or descending order.
- Save the changed values to activate them. Press the button next to "Save".
- Modified values that are not stored are not enabled.
- Press [Back] to return to the last menu.
- Press [Home] to return to the "Standby" window.

4.3.2.1 START button

- To start the measurements.

During evacuation, the LED flashes. During the measurement, the LED lights up continuously.

4.3.2.2 STOP button

- To stop the measurements.

4.3.2.3 ZERO button

- To hide the "Background signal", see also "Definition of terms”.

To switch off the function ZERO again, press the buttonZERO for about 3 seconds.

The function ZERO should be activated only if the leak rate signal is stable and no leak is measured. See also "Setting filter and ZERO [▸ 45]".

4.3.2.4 Meaning of the function symbols

	Adjust the volume for the speaker.
2	Adjust volume: The currently adjusted volume is displayed at the bottom edge of the display. The value range is 0 (off) to 15 (max.).
	Call up the "Configuration" menu.
ZERO	ZERO is active.
Cali- bration	Call up the calibration.

	Call up information about the device.
	This takes you to the measuring screen or "Standby".
	Back to the previous menu item.
	A warning or error message is active.

4.3.2.5 Structure of the display and menu

After the device has started up, the display will show the "Standby" window. The device is ready for making measurements. You can change the settings for the measurements.

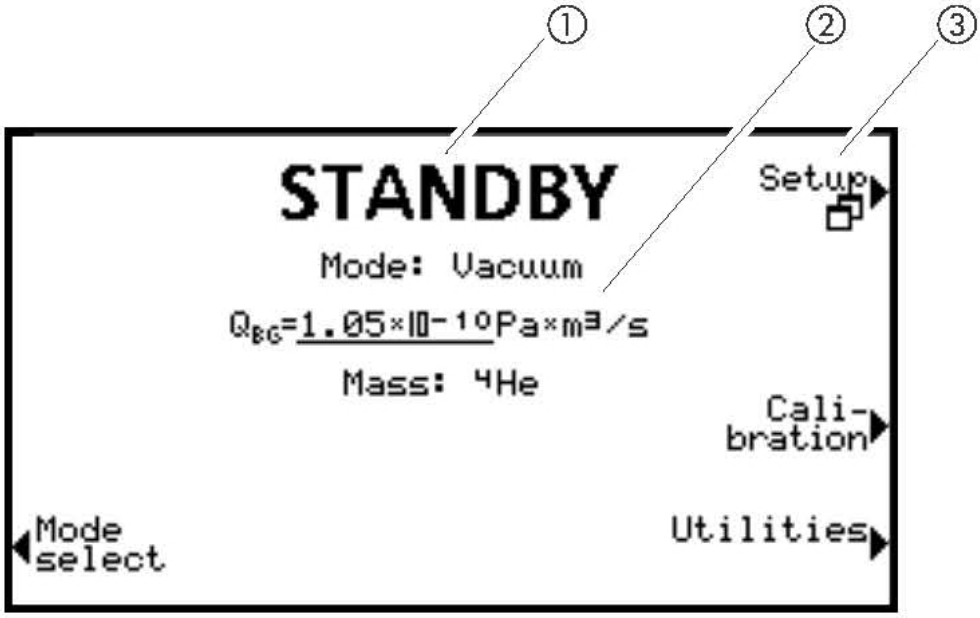

Fig. 4: Menu window: Standby

1	Designation of the menu display	2	Main display area
3	Menu name		

The main display area shows the current state of the device: operation mode, measurement situation, background, tracer gas.

Menu name

Select the menus by pressing the adjacent round buttons immediately to the left or right of the display.

4.3.2.6 Measuring screen layout

The measured leak rates are displayed numerically with a bar graph or graphically in a diagram as a function of the measuring time. Use the bottom right button to switch between the display options. Next to this button is the symbol for the analog display or the graphical display.

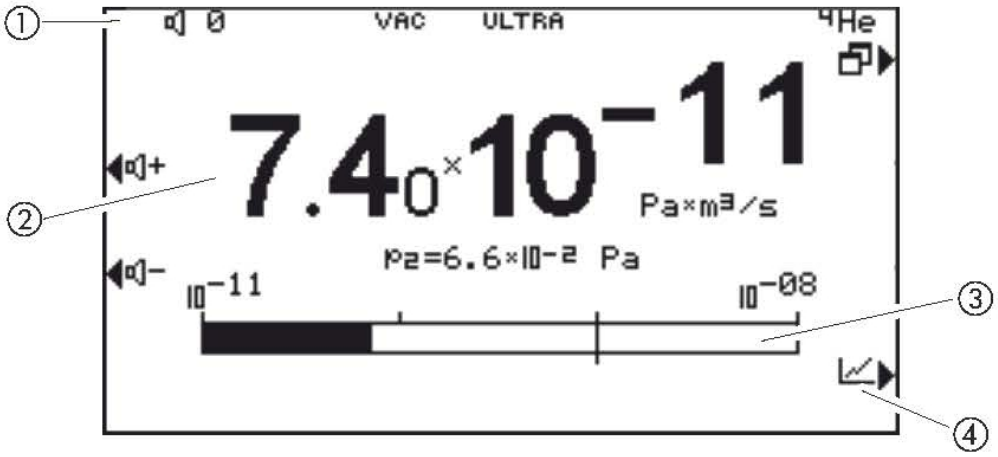

Fig. 5: Numerical display, measuring screen

1	Information area (volume, operation mode, measuring situation, ZERO active, tracer gas)	2	Currently measured value (displayed using pressure at inlet flange p2)
3	Bar graph (the currently measured value is displayed as a bar graph)	4	Switch to measuring screen

4.3.3 Vacuum connections

4.3.3.1 Inlet

The inlet is located on the upper part of the device. This is a DN 25 KF flange.

If you select the vacuum leak test mode, connect the test object or the vacuum chamber to the flange.

If you are testing applications with dust or dirt, use the O-ring with filter, see "--- FEHLENDER LINK ---". In this case, the pump down times are extended.

Also use this inlet for the connection of the sniffer line or the test chamber.

4.3.3.2 Exhaust gas connection

⚠ DANGER

Health risk due to gases and vapors

Hazardous combustion products such as smoke, fumes, sulfur oxides, aldehydes and carbon oxides may arise when operating the leak detector.

- With an oil-sealed backing pump, connect an exhaust line to the exhaust gas connection.
- Prevent inhalation of harmful gases or oil vapors.
- Ensure sufficient ventilation at the installation location.

⚠ WARNING

Overpressure can destroy the vacuum pump

Avoid overpressure.

The exhaust connection is located at the back of the device. See Overall device [▸ 14].

4.3.3.3 Venting connection

Normally, the specimens are vented with ambient air after completion of the test. If necessary, the test specimens can be ventilated with a different gas (e.g., fresh air, dry air, nitrogen, etc.) to a maximum of 1.1 mbar pressure.

In these cases, a ventilation hose must be connected to the ventilation connection of the device, see "Overall device [▸ 14]".

4.3.4 Connections for accessories and control signals

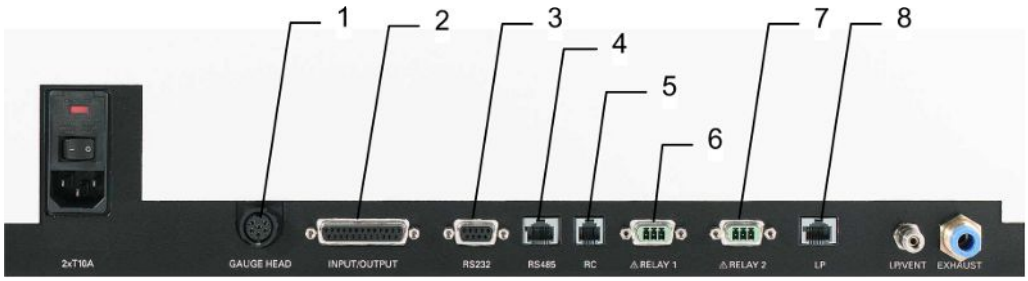

Fig. 6: Linxon interfaces

1	**GAUGE HEAD**	Connection for compact measuring tube
2	**INPUT/ OUTPUT**	Control and output signals
3	**RS232**	Connection for PC/printer
4	**RS485**	Connection for PC
5	**RC**	Remote control or radio transmitter
6	**Relay 1**	Relay contact
7	**Relay 2**	Relay contact
8	**Sniffer line**	Connection for sniffer line 3 m, 5 m, 10 m

NOTICE

The electronics of the device can be destroyed.

- Only connect devices that are provided for the appropriate interfaces.

The connections for the external devices show a safe disconnection from the power supply and are within the range of the safety extra low voltage (SELV).

GAUGE HEAD

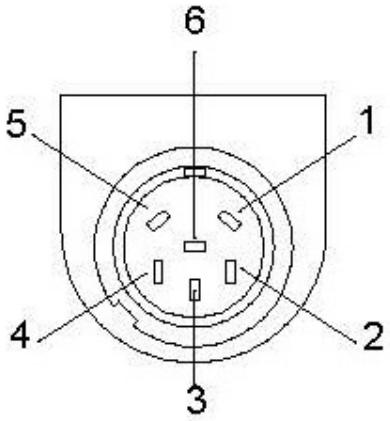

Fig. 7: GAUGE HEAD

1	Identification	2	GND
3	Measurement signal	4	Measurement signal
5	Shielding	6	+24 V (0.8 A slow-blowing fuse)

INPUT/OUTPUT

Input and output signals, 25-pin, D-Sub, sockets.

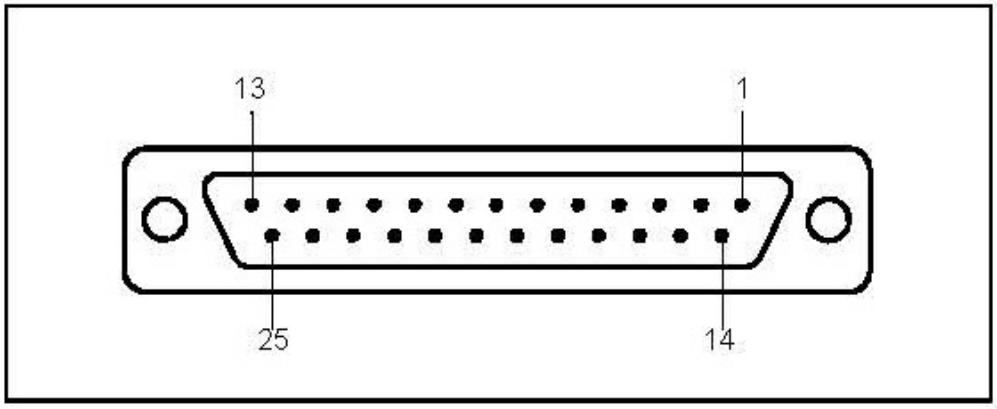

Fig. 8: D-Sub connector

Pin	Signal	Explanation
1	Channel 1	Analog output, 0 … 10 V, Ri 3 Ω.
2	Channel 2	Analog output, 0 … 10 V, Ri 3 Ω.
3	AGND	Reference potential of analog outputs, galv. isolated
4		Audio output (headphones or active box)
5		Reference potential for the audio output
6 … 13	DI 1 … 8	Digital inputs, +18 … 30 V (approx. 5 mA). The functions are triggered with the positive edge. Equal to the control unit.
6	Start/Stop	Starts the measurement in the "Ready" state and stops the measurement in the "Measuring" state.

Pin	Signal	Explanation
7	Vent	Venting in the "Manual venting" setting.
8	ZERO	Function of the ZERO button. If pressed longer than 3 s, ZERO is canceled.
9	Calibrate	Starts the calibration or for the confirmation of "Calibration Acknowledge" (Pin 19)
10	PARA 2	When activating: "Parameter set 2 is loaded." When deactivating: "Parameter set 1 is loaded."
11	Bypass	Response: "Bypass option available"
14	DGND	Reference potential for the digital inputs, galvanically isolated
15 … 22	DO 1 … 8	Digital outputs, not galvanically isolated, active 24 V ± 10%, passive at DGND (0 V) Maximum permissible current: 800 mA for all outputs together When switching on, all outputs are active for approx. 1 s
15	Ready to start	Active if the device is ready to evacuate the test volume.
16	Ready to measure	Active if the device is measuring, i.e., in the counterflow, Twin-FlowTM low or Twin-FlowTM high state
17	Leak	Enabled when the alarm threshold is activated and exceeded, disabled below 90% of this value
18	Error	Active in an error state
19		Active, if the device waits for confirmation during calibration: internal calibration: - Apply factors? External calibration: - Calibration leak open and signal stable? - Calibration leak closed and signal stable? - Apply factors?
21	Bypass valve	Active if the bypass valve is open (activation of bypass option)
22	No Leak	Active if the alarm threshold has been undershot.
23	DGND (0 V)	Reference potential for the digital outputs, not galvanically isolated

Pin	Signal	Explanation
25	+24 V	+24 V, e.g., for controlling the digital inputs, 0.8 A slow-blowing fuse

Examples of digital inputs

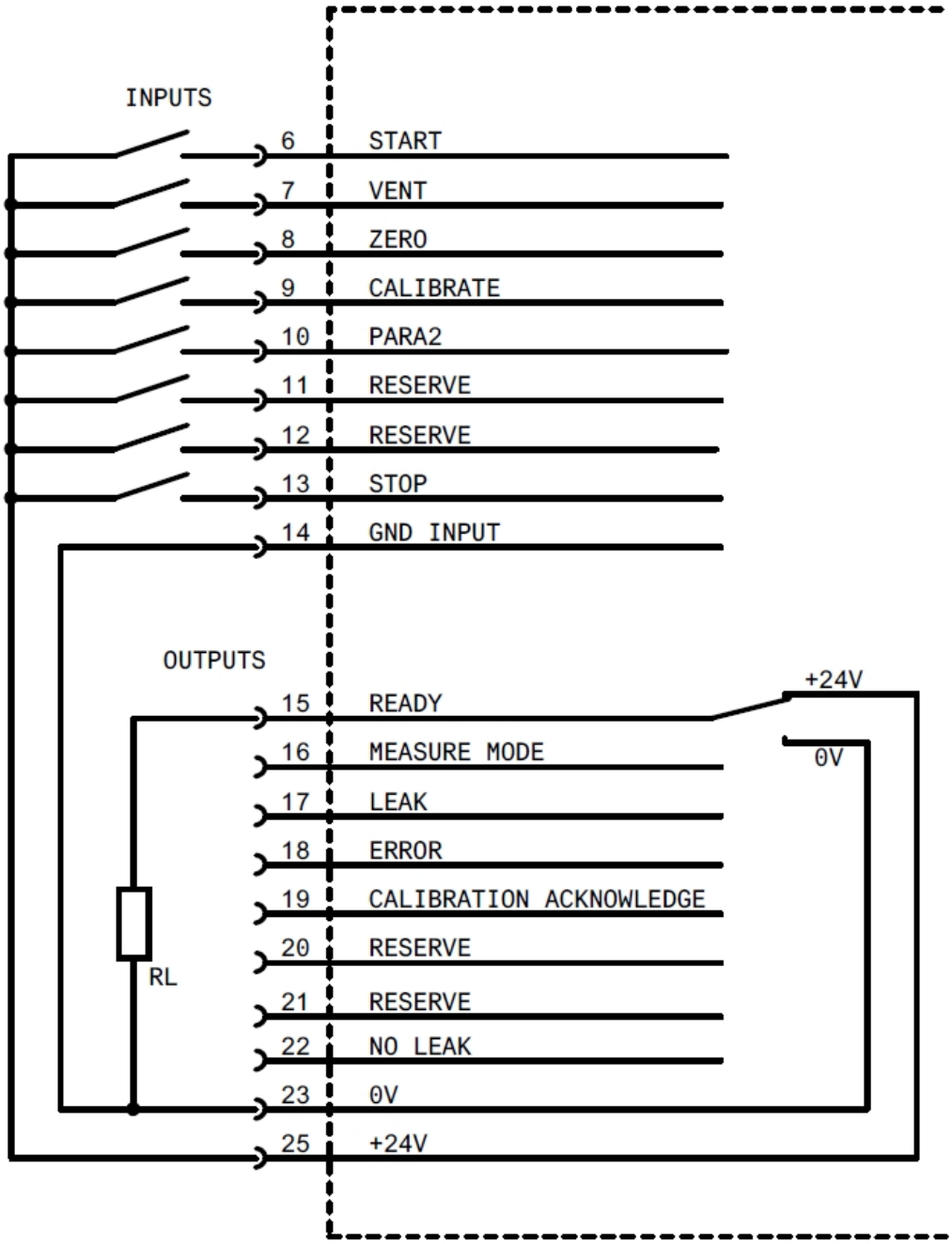

Fig. 9: Examples of digital inputs

There must be a connection between Pin 14 and Pin 23 during actuation using the +24 V of the leak detector.

Remote control unit

This remote control interface is designed as a serial interface to control the device via the remote control unit when using the wired version. The remote control unit can be connected via a connection cable with an RJ45 connector (Fig. 10-2/5). The remote control unit is not part of the normal delivery for the device.

Pin	Signal
2	+24 V (0.8 A slow-blowing fuse)
3	0 V DGND (0 V)
4	RxD (intern. RS232)
5	TxD (intern. RS232)

RS485

⚠ CAUTION

Please ensure that you do not confuse the "RS485" connector with the "LP"connector. Otherwise, the device will not work.

The device can be connected to a computer via the RS485 serial interface.

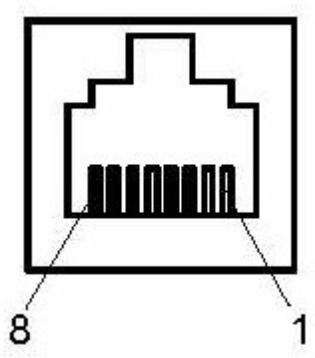

Fig. 10: RS485 8-pin

Pin	
2	+24 V (for the power supply of the fieldbus converter; 0.8 A slow-blowing fuse)
3	free
4	free
5	D+ (galvanically isolated)
6	DGND (0V)
7	D- (galvanically isolated
8	free

RS232

Connection for computer. 9-pin, D-Sub sockets, RS232 (RS485 optional).

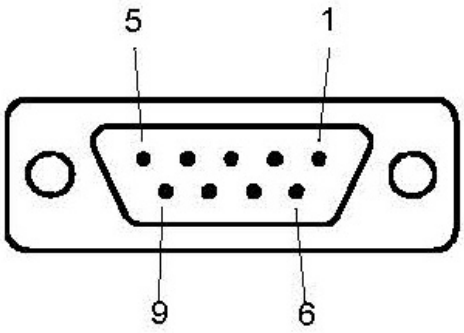

Fig. 11: RS232 interface

Pin	Signal	
2	TxD	Send data (galvanically isolated)
3	RxD	Receive data (galvanically isolated)
5	GGND	Reference potential (galvanically isolated)

Relay 1, relay 2

⚠ CAUTION

Caution: Supply voltage

Improperly fused products can be life-threatening. Only use fuses with the values given in the instructions!

Relay contact 230 V~, 3 A

Power Subcon connector, 3-pin

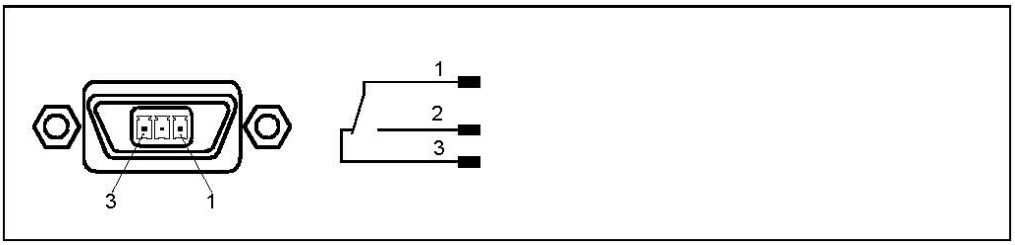

Fig. 12: Relay

LP connection

⚠ CAUTION

The connectors look very similar!

There is the risk of confusing the connectors with the "RS485" connector.

Connection for sniffer line 3 m, 5 m, 10 m, RJ45, 8-pin

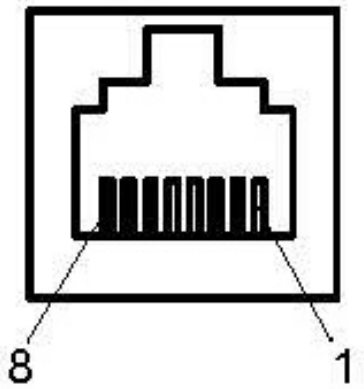

Fig. 13: LP connection

Pin	Signal
3	ZERO
4	(red LED)
5	(green LED)
6	+24 V (0.8 A slow-blowing fuse)

Green LED: Leak detector is ready for making measurements.

Red LED: Threshold is exceeded.

4.4 Technical data

4.4.1 General data

LX218	
Dimensions	555 mm x 305 mm x 425 mm (LxWxH)
Weight	
With oil-sealed pump	42 kg
With dry compressing pump	41 kg
Without pump (module)	32 kg
Inlet flange	DN 25 ISO- KF
Cooling air	
Inlet	Bottom side; with dust filter
Outlet	Rear side
Exhaust gas connection	For hose Ø 8/6 mm
External backing pump connection	DN 25 ISO- KF

LX218	
Degassing connection (N2)	Sniffer line connection for hose Ø 6/4 mm
Maximum pressure at the degassing connection	1.1 bar
Ingress protection	IP 30
Pollution degree	2

Table 1: General information

4.4.2 Data on power connections

LX218		
Voltage/frequency		
8200-000	Oil-sealed pump	230V ±10% / 50Hz
8200-001	Oil-sealed pump	115V ±10% / 60Hz
8200-002	Dry compressing pump	230V ±10% / 50Hz
8200-003	Dry compressing pump	115V ±10% / 60Hz
8200-004	Without pump	100-230V 50/60Hz
8200-005	Oil-sealed pump	100V ±10% / 60Hz
Excess voltage category		II
Current		< 10 A
Energy consumption	Oil-sealed pump	< 720 VA
	Dry compressing pump	< 300 VA
Fuses		2 pieces, 10.0 A slow-blowing, 250 V, Ø 5 × 20 mm

Table 2: Power connections

4.4.3 Ambient conditions

	LX218
Temperature	
Storage	-10 °C to +55 °C
Operation	+10 °C to +35 °C
Max. relative humidity	Max. 80% up to +31 °C, decreasing to 50% at +35 °C
Use	Only indoors. Elevation up to 2000 m above sea level.
Noise level	< 70 dB (A)

Table 3: Ambient conditions

4.4.4 Measurement data

Operation modes	Vacuum/sniffing
Operating readiness	≤ 3 minutes (run-up time of pump)
Inlet pressure	≤ 18 mbar (temporarily up to 25 mbar)
Filaments	2 (iridium/yttrium oxide)
Filter stages	none static dynamic
Measurement rate	20 Hz
Display rate	3 Hz
Alarm Acoustics/volume Setpoint/early warning Relay output	 adjustable adjustable adjustable
Screen display	Leak rate vs. time, analog/digital
Operation mode "Vacuum"	
Minimum detectable leak rate ^{4}He ^{3}He H_2	After AVS 2.1 < 1 x 10^{-10} mbar l/s < 5 x 10^{-10} mbar l/s < 5 x 10^{-8} mbar l/s
Maximum detectable leak rate ^{4}He H_2, ^{3}He	 1 mbar l/s 1 x 10^{-2} mbar l/s
Measurement range	10^{-12} … 1 mbar l/s
Measurement units for the display	mbar l/s, Pa m³/s, sccm, sccs Torr*l/s, atmcc/s
Detectable gases	^{4}He, ^{3}He, H_2
Response time (at 63% of the signal)	< 0.3 s
Throughput for helium	> 2.5 l/s for p_{inlet} < 0.5 mbar
Throughput at inlet with large backing pump (on LX218)	depending on the external pump
Pump-down time for high sensitivity at a volume of 0.5 L at a volume of 10 L at a volume of 100 L	 2 s 70 s 700 s

Pump-down time before first measurement at a volume of 0.5 L at a volume of 10 L at a volume of 100 L	 2 s 45 s 500 s
Internal calibration leak	Rear side of the device
Operation mode "Sniffing"	
Minimum detectable leak rate ^4He, ^3He, H_2	After AVS 2.1 < 5 x 10^{-8} mbar l/s
Maximum detectable leak rate ^4He H_2, ^3He	 1 mbar l/s 1 x 10^{-2} mbar l/s
Measurement range	10^{-8} … 1 mbar l/s
Measurement units for the display	mbar l/s, Pa m³/s, sccm, sccs Torr*l/s, atmcc/s
Detectable gases	^4He, ^3He, H_2
Response time	< 0.1 s with 3 m sniffer line

Table 4: Measuring

4.4.5 Data for the turbo pump

SplitFlow 80	Turbo pump with intermediate pumps
Volume flow for N2	60 l/s

Table 5: Turbo pump

5 Installation

5.1 Setup

- So that measurement results are not falsified, use in an area that has a constant ambient temperature if possible.
- In order not to block the exhaust opening on the lower part of the device, place the feet of the unit on a firm even surface.
- To easily reach the power switch on the back of the device, ensure there is sufficient free space behind the device.
- Do not expose the device to direct sunlight.

⚠ DANGER

There is a risk of injury when transporting the device.

The device is heavy and can slip out of hand.

► Lift and transport the device only with two people.

⚠ WARNING

Danger from moisture and electricity

Moisture entering the device can lead to personal injury due to electric shocks as well as damage to property due to short circuiting.

► Only operate the device in dry environments and only in buildings.

► Operate the device away from sources of liquid and moisture.

► Position the device so that you can always reach the plug for unplugging.

► Do not operate the device in standing water and do not allow even a drop of water or other liquid on the device.

► Prevent the device from coming into contact with bases, acids and solvents.

⚠ CAUTION

Risk of injury from lifting the heavy device

The device is heavy and can slip out of hand.

► Do not use the inlet flange to lift the device.

► Lift and transport the device only with two people.

► To lift, grasp the handle grips on the sides of the device.

NOTICE

Material damage from overheated device

The device heats up during operation and can overheat without sufficient ventilation.

- Please note the technical data.
- Ensure sufficient ventilation, especially on the ventilation slots on the left and right of the device: There should be free space in the front, to the rear and sides of the unit of at least 10 cm.
- Keep heat sources away from the device.

Prevention of measurement errors due to leaks in the helium source in the device surroundings

We recommend that you regularly check around the device to a distance of 10 m all large helium sources for gross leaks. Use a sniffer line to do this.

⚠ DANGER

There is a risk of injury when transporting the device.

The device is heavy and can slip out of hand.

- Lift and transport the device only with two people.

1. Place the device on a level, slip-proof work area.
2. Prevent tripping hazards when placing the device and connecting lines.

5.2 Connecting to the power supply system

⚠ WARNING

Danger from electric shock

Improperly grounded or fused products may be dangerous to life in case of a fault. The use of the device is not permitted without a connected protective conductor.

- Only use the included 3-wire power cable.
- Replace defective power cables.
- Only use the hospital grade power cable when using the device in a region with a power supply of 100 to 120V.
- Always replace a defective power cord with a hospital grade power cord when using the device in a region with a power supply of 100 to 120V.
- Make sure that the power supply plug is always accessible.

  ⇨ Then you can immediately disconnect the device from the mains in the event of damage, for example if smoke develops.

5.3 Checking the operation of the device

NOTICE

Damage to the turbo molecular pump due to jerking movements

Jerking movements can damage the running turbo molecular pump.

- Avoid any jerking movements or vibrations to the device during operation and for up to 2 minutes after switching off.

Do not switch on the device when the ambient temperature is less than 10 °C.

✓ A DN 25 KF blank flange is available (if not already installed on the inlet flange).

✓ A helium calibration leak is available (optional).

1. Unpack the device, take a look at the supply and inspect for any visual damage.
2. Check if the inlet is blind-flanged. If this is not so, flange a blank flange with an O-ring gasket on the inlet on the upper side of the device.
3. Connect the device to the power supply.
4. Switch on the leak detector via the power supply switch.

⇨ After switching on, status information is shown on the touchscreen about the speed of the turbo molecular pump, the foreline pressure, the emission and the active cathode. The start process takes about 3 minutes and is completed with a short acoustic signal. Now, the device is in the "Standby" mode (ready to operate).

5 Press the STARTbutton.

⇨ The inlet is evacuated and then the measuring mode for the measured leak rate is shown.
In case a test object was connected, you would start with spraying helium on the outside.

6 In case you would like to suppress any possible existing background signals (helium background in the test object) press the ZERObutton.
In order to reverse the background suppression press the ZERO button on the control panel for 2 - 3 seconds, see "Control unit [▸ 16]".

7 Press the Stopbutton.

⇨ The device switches to the "Standby" mode.
If you press the Stop button on the control panel for a few seconds the inlet of the device is ventilated.

8 If you want to end the test now you can switch off the device.

9 If you want to check the internal calibration wait, for getting a better quality of measurement results, 15 to 20 minutes until the device has warmed up.

10 In order to call up the calibration menu, press "CAL".

Standby > Configuration > Global settings > Access control > Access to the CAL function

1 Press the button.

⇨ The automatic internal calibration starts and requires approx. 30 seconds.

2 If you want to check the measurement accuracy of the device using the optional helium calibration leak remove the blank flange from the inlet and connect an open helium calibration leak onto the inlet.

3 Press the STARTbutton.

⇨ The inlet is evacuated and the leak rate of the test object is measured and displayed.

4 Press the Stopbutton to interrupt the measurement.

⇨ The leak detector changes into the "Standby" mode.

5 Press the Stop button on the housing until the message STANDBY/VENTED appears on the display.

⇨ The inlet is now in the vented state.

6 Separate the helium calibration leak from the inlet and flange the inlet blind again.

7 Switch off the device via the power supply switch.

5.4 Connecting an external backing pump

Final pressure p	0.1 mbar
Pumping speed	< 6 m³/h

Table 6: Specifications for the external backing pump

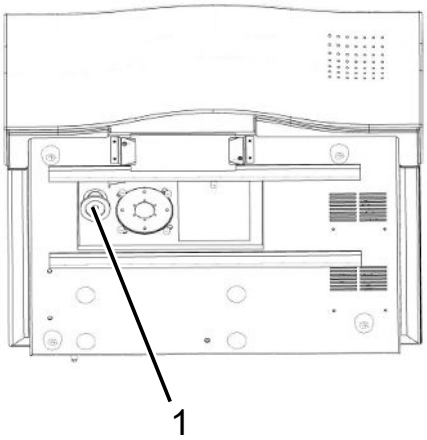

1	Connection for the external pump

At the bottom of the device is the DN 25 ISO-KF connection flange. To install the hose, proceed as follows:

1 Lay the device on its side.

2 Place an O-ring between the end of the hose and the connection flange.

3 Clamp both together with a clamping ring.

4 Raise the device up.

6 Operation

6.1 Switching on

Before you switch on the device, connect the accessories or devices that are also needed.

Operation mode	Connected to
Operation mode "Sniffing"	Sniffer line on vacuum chamber flange
Operation mode "Vacuum"	Test object

► In order to switch on the device, press the power switch.

⇨ When delivered, the device shows the window "Standby" after run-up.

6.2 Standby

After run-up, the "Standby" window is shown.

Certain parameters are displayed under the name "Standby".

Parameter	Meaning	Comments
Operation mode	Operation mode	Switch between operation modes "Vacuum" and "Sniffing"
Q_{BG}	Current background signal	Appears if the corresponding option in the "Background ready to start" menu has been selected.
Mass	Gas	Switch between ^{4}He, ^{3}He, H_2

Operation mode selection

1. In the "Standby" window, select the "Select operation mode" menu.
2. Select the operation mode "Measuring".
3. Choose between "Vacuum" or "Sniffing".

   ⇨ The current operation mode is displayed in the "Standby" window.
4. Select "Save".

	As an alternative, you can also change the operation mode in "Run-up > Test settings > Operation mode & mass" and switch between the detectable gases.
Run-up	Here, you can adjust various settings for the measurement tasks, as well as global settings, e.g., changing the display or editing permissions. Select "Run-up > Configuration"
Calibration CAL	This function is displayed if the calibration is active in the "Access control" menu. Select "Standby > Calibration"
Check internal calibration leak	This function starts the check of the internal calibration leak. Select "Standby > Calibration > Check internal calibration leak"
Reassessing background	You can use the background reassessment to start a start/stop cycle to break Select "Standby > Calibration > Reassess background"

6.3 Basic settings

You are able to save the actual settings of the device at any time, so that you can use them at a later time, see also "Saving and managing sets of parameters".

6.3.1 Global settings

For an overview of the setting options, please note the menu tree display. You can carry out your own settings or keep the factory settings.

If necessary, you can save your settings at any time to restore an earlier condition. You reach the menus via

Standby > Configuration > Global settings

- Display
- Access control
- Maintenance & service
- Interfaces
- Load/save parameters
- Volume & beeping

6.3.1.1 Setting the display

In the "Display" menu, you change the display type by selecting the following:

- Contrast
- Units
- Date and time
- Display area
- Lower display limit
- Language

Contrast

Standby > Configuration > Global settings > Display settings > Contrast

1. You can increase or decrease the contrast with the "+" and "-" buttons. If you keep the buttons pressed, the values change continuously.
2. In order to adjust the contrast to the device temperature automatically, select "Automatic".
3. To make the background of the display darker and the lettering lighter, select "Invert display".

Units

The following options can be selected:

Settings	Measurement units	Comments
Leak rate	mbar*l/s	
	Pa*m3/s	
	Torr*l/s	
	sccm	
	sccs	
	atm*cc/s	
	ppm	Only available in the operation mode "Sniffing"

Settings	Measurement units	Comments
	g/a	Only available in the operation mode "Sniffing"
	oz/yr	Only available in the operation mode "Sniffing"
Pressure	mbar	
	Pa	
	atm	
	Torr	

Standby > Configuration > Global settings > Display settings > Units

1. In order to define the respective measurement units, press "Leak rate" or "Pressure".

Date and time

- Date in the format DD.MM.YYYY
- Time in the hh:mm format

Standby > Configuration > Global settings > Display settings > Date and time

Display area

Specify how the measurement results are to be displayed.

Option	Value range (min./max.)	Comments
Scaling	linear	Linear display
	Log	Logarithmic display
Dec.	2 … 9	Number of decades for the log. display
Range	Automatic	Automatic measuring range selection
	Manual	Manual measuring range selection using functions in the display
Time axis	16 … 960	Time axis and time scale in seconds

Standby > Configuration > Global settings > Display settings > Display area

Lower display limit

Standby > Configuration > Global settings > Display settings > Lower display limit

In the measuring mode, you can set a lower limit for the display of the leak rate. The setting is only effective for the "Vacuum" operation mode.

Options	Value range (min./max.)	Comments
Lower display limit	With the units mbar*l/s: 1E-12 mbar*l/s 1E-11 mbar*l/s 1E-10 mbar*l/s 1E-9 mbar*l/s	The display limit only affects the operation mode "Vacuum".

Language

The following languages are available for the menu

- English (factory setting)
- Chinese

Standby > Configuration > Global settings > Display settings > Language

or

► As an alternative, you can press "Language" in the "Run-up" window.

6.3.1.2 Access control

In the "Access control" window, you can specify the access rights for various control areas

- Activating maintenance
- Access to the CAL function
- Change device PIN
- Changing the menu PIN

Standby > Configuration > Global settings > Access control

Activating maintenance

- Access to the maintenance menu
- Venting the turbo molecular pump during the run-up of the device. You need this function to replace the lubricant reservoir of the SplitFlow 80 TMP. Further information can be found in the separate operating instructions.

Options	Value range	Comments
Maintenance activated	YES	Access to the "Maintenance and service" menu is enabled. The TMP can be vented during run-up.
	No	Access to the "Maintenance and service" menu is not enabled. The turbo molecular pump (TMP) cannot be vented during run-up.

Standby > Configuration > Global settings > Access control > Maintenance activated

Access to CAL function

Define the permission for carrying out a calibration of the device.

Options	Value range	Comments
Enable calibration	YES	The calibration can be started via the "Standby" window.
	No	The calibration cannot be started via the "Standby" window.

Standby > Configuration > Global settings > Access control > Access to the CAL function

Change device PIN

The device PIN controls the use of the device.

If this function has been activated, then a personal identification number (PIN) must be entered to use the device. Only those who know the PIN and enter it correctly can start the device. The device can not be used without entering the correct PIN. The device PIN is requested immediately after switching on the device. If you enter an incorrect PIN, the following message appears: "Incorrect PIN".

Authorization for the device is active if the current device PIN is not 0000.

If you activate authorization for the device, you have to save the device PIN.

If you have forgotten the device PIN, contact Linxon.

Options	Value range (min./max.)	Comments
New PIN	0000 – 9999	New device PIN
New PIN (confirmation)	0000 – 9999	New device PIN. Repeat to confirm.

Standby > Configuration > Global settings > Access control > Change device PIN

Changing the menu PIN

The menu PIN controls access to the software menu of the device. If this function has been activated, a personal identification number (PIN) must be entered to access the menu for the device. Only those who know the PIN and enter it correctly can access the device menu.

The menu PIN is requested when accessing the menus. If you enter the incorrect PIN, the message "Incorrect PIN" is displayed. Only the menu "Configuration> Information" is accessible without restrictions (see chapter entitled Calling up information about the device [▸ 58]).

Permission for the menu is activated if the current menu PIN is not 0000. After activating the user permission for the menu, the function is activated after 2 minutes. The setting can be changed during this time. The correct menu PIN must then be entered to access all the menus.

If you activate permission for the menu, be sure to save the menu PIN.

If you have forgotten the menu PIN, contact Linxon.

Options	Value range (min./max.)	Comments
New PIN	0000 – 9999	New menu PIN
New PIN (confirmation)	0000 – 9999	New menu PIN. Repeat to confirm.

Standby > Configuration > Global settings > Access control > Change menu PIN

6.3.1.3 Loading/saving parameters

You can save the parameters for a measurement task. To quickly set up the device for a measurement task, you can load saved parameter sets.

Standby > Configuration > Global settings > Load/save parameters

Load Para Set 1 or 2

The save date of the parameter set is displayed.

- The "Display parameter set" function lists all saved settings.
- "Load" activates the saved parameter set after confirming.

Save as Para Set 1 or 2

The current parameters are saved as a specified set name. Any parameter set that was saved under this name will be overwritten.

Load the factory settings

The factory settings are loaded. For more information, see Chapter C, "List of Defaults".

6.3.1.4 Volume and beeping

⚠ WARNING

Damage to hearing due to loud audio

The alarm level of the device can exceed 85 dB(A).

- Adjust the volume accordingly.
- Only expose yourself a short time to the alarm.
- Use hearing protection.

Standby > Configuration > Global settings > Beep volume

Beeping sound: Enable or disable the sounds. The sounds signal, for example, a change of state.

Minimum volume: You can set the minimum volume. You can set the volume in the measurement view. The setting applies to the speaker in the device.

Setting range: 0 to 15

6.4 Settings for the measurements

6.4.1 Selecting the operation mode and mass

- Select the operation mode
- Select the gas (mass)
- Set the leak rate factor

If a menu PIN is required to access the software menu, this function is not available until the PIN is entered.

Option	Value range (min./max.)	Comments
Operation mode	Vacuum Sniffing	Operation mode "Vacuum" Operation mode "Sniffing" Connect the sniffer line before pressing START
Mass	H_2 (2 amu) ^{3}He (3 amu) ^{4}He (4 amu)	Detectable gas H_2 Detectable gas ^{3}H Detectable gas ^{4}H
Leak rate factor	Factor 1E-6 … 1E+6	Leak rate converted using user-defined factor

If you use a different tracer gas for the leak detector than the one used in normal mode later, you can use a leak rate factor to convert the measured leak rates (^{4}He, ^{3}He or H_2):

- into an equivalent leak rate of another gas
- into an equivalent leak rate (^{4}He, ^{3}He or H_2) under flow conditions other than molecular flow

Under molecular flow conditions, the leak rate only depends on the mass of the gas.

Standby > Configuration > Test settings > Operation mode & mass

► Adjust your settings in accordance with the table above.

As an alternative, you can change the operation mode using "Select operation mode" in the "Standby" window.

6.4.2 Setting filter and ZERO

- The setting of the leak rate filter influences the display of the measurement results. The recommended setting here, i.e., "Filter: dynamic", ensures that the signals are averaged at optimized time intervals, based on the particular leak rate range. In addition, the filter eliminates interference spikes that have nothing to do with the leak rate signals and shows response times even at low leak rates.
- With "ZERO", you can suppress unwanted helium or hydrogen backgrounds. When ZERO is activated, the currently measured leak rate value is interpreted as a helium or hydrogen background and is subtracted from any subsequently measured values.
  If the background in the device is reduced, then the background value that is suppressed by "ZERO" is automatically adjusted.

In order to activate the ZERO function, press the ZERO button on the device or on the sniffer line briefly.

In order to deactivate the ZERO function, press and hold the ZERO button on the device or on the sniffer line for more than 3 seconds.

The background subtraction of the mass spectrometer is set by default. Additional information can be found in the following table:

Options	Value range (min./max.)	Comments
Filter	Dynamic	Leak rate filter with dynamic time constant setting
	Static	Leak rate filter with fixed time constant
	none	No leak rate filter
ZERO	Enabled	Manual background suppression activated
	Not active	Manual background suppression deactivated
	With start Min:sec 2 s/5 min	If the most sensitive and most active measurement range has been reached, ZERO is carried out after the set time
MS-BG subtraction	On	The internal background is subtracted by pressing START. The inner background is generated by a residual gas (e.g., helium), which has not yet been pumped out. The sources of residual gas are the air or gases absorbed by the interior surfaces of the leak detector. This background will never disappear completely. Very clean systems that have been pumped out for a long time have a background in the range of 10^{-11} mbar l/s. Under normal conditions, a background in the range of 10^{-10} mbar l/s or a lower 10^{-9} mbar l/s range can be expected.

Options	Value range (min./max.)	Comments
		With the activation of "START", this currently measured internal background is automatically subtracted from all further measurements. This ensures that only the net leak rate of the test object is measured. If the leak detector is put back in Standby/STOP mode, a new background is displayed after 25 seconds at the latest.
	Off	With START, the internal mass spectrometer background (MS-BG) is not subtracted. See description under "On".

Standby > Configuration > Test settings > Filter & ZERO

Information on active background suppression can be found in the status line of the measurement screen:

Display	Setpoint
ZERO	after pressing the ZERO button briefly in the "activated" or "with Start" setting
ZERO Start	appears after the pre-set time has passed in the "with Start" setting

6.4.3 Setting vacuum ranges

⚠ CAUTION

Damage to turbo pump due to high load

Operation at 15 ... 25 mbar places a heavy load on the turbo pump. Avoid continuous operation in this pressure range.

NOTICE

Changing the default settings can result in significant device performance reduction. If you have questions, contact the manufacturer.

Standby > Configuration > Test settings > Vacuum ranges

These settings can only be set for the operation mode "Vacuum":

Options	Value range (min./max.)	Comments
ULTRA	Activated	Activated
	Deactivated	Deactivated
	0.01 - 0.5 mbar	Pressure at which valve V4 opens
FINE	Activated	Activated
	Deactivated	Deactivated
	0.1 - 0.5 mbar	Pressure at which valve V3 opens
GROSS	Activated	Activated
	Deactivated	Deactivated
	0.1 - 25 mbar	Pressure at which valve V1 opens

6.4.4 Setting the evacuation time and ventilation

Standby > Configuration > Test settings > Evacuation time & ventilation

Note the following information for the "Evacuation time & ventilation" menu:

"Venting: Deactivated" or "Venting: Manual" prevents the unintentional venting of vacuum devices connected to the inlet flange.

With the setting "Venting: Deactivated", the inlet flange can only be flooded by changing the settings in the menu "Evacuation time & ventilation".

With the "Venting: Manual" setting, you can perform a targeted venting in the "Standby" window by pressing the STOP button for more than 2 seconds.

Options	Value range (min./max.)	Comments
Maximum possible evacuation time	1 s … 30 min., indefinite	If the test object has a gross leak, then the pump down time will be longer. The maximum evacuation time limits the time that the test object is evacuated. If this time is exceeded, the

Options	Value range (min./max.)	Comments
		pump down operation stops before reaching the final pressure of 15 mbar and an error message is displayed.
Venting	Manual	The test connection can be vented by pressing "Vent" in the "Standby" window.
	With STOP	The inlet flange is automatically vented after STOP.
	Deactivated	Venting for the inlet flange in the "Standby" window is deactivated.
System venting		Start/stop cycles with short intervals for removing an increased helium background.
	Activated (factory settings)	The following functions are activated: Switch off: TMP is flooded Switch on (only dry compressing pump): Diaphragm pump is flooded

6.4.5 Setting gross leak protection

Standby > Configuration > Test settings > Gross leak protection

At the earliest, activate the gross leak protection after the expiration of the alarm delay time. See also Setting the setpoint and alarm [▸ 50].

When the gross leak protection is activated, the device closes all inlet valves as soon as the measured leak rate exceeds the limit value. In this way, only a small amount of helium will get into the mass spectrometer, so that the device is not contaminated by helium.

An external pump can pump out helium that has entered the test object. If no external pump is available, vent the test object before the next measurement.

Options	Value range (min./max.)	Comments
Protection	On	Gross leak protection is switched on
	Off	Gross leak protection is switched off
Limit value	1E-9 ... 1E+3 mbar*l/s)	Switch-off limit for the gross leak protection function

6.4.6 Setting pressure limits for operation mode "Sniffing"

Standby > Configuration > Test settings > Pressure limits for sniffing mode

The pressure limits are only defined for the sniff mode ("Sniff" operation mode). The monitoring unit for the sniffer line uses the pressure limits.

If you call up the menu during the measurement, the current pressure is also displayed.

Options	Value range (min./max.)	Comments
Min. pressure	0.15 … 0.60 mbar	The warning "Pressure too low" appears if the pressure falls below this value while in the measuring mode.
Max. pressure	0.25 … 0.65 mbar	The warning "Pressure too high" appears if the pressure exceeds this value while in the measuring mode.

6.4.7 Setting the setpoint and alarm

Standby > Configuration > Setpoint and alarm

- Define a setpoint and specify how the device is to respond to certain measured values.
- You can also set an alarm delay time under "Trigger alarm" and "Setpoint".

In certain applications (e.g., when evacuating a "test chamber system"), it can be useful to suppress an alarm for a certain time period.

After pressing START, the acoustic signal can be activated as soon as the leak rate falls below the warning threshold or an alarm delay time expires or the alarm type "Prop. leak rate"/"Pinpoint" or "Sniff" is set.

Options	Value range (Min. Max.)	Comments
Operation mode	Prop. leak rate	The frequency of the audible signal is proportional to the bar graph display. The frequency range is 300 Hz to 3300 Hz.
Trigger alarm 0 min, 10 min		If the leak rate is below the warning limit, no sound is output. If the leak rate is greater than the warning limit and less than the setpoint, a continuous sound is output.

6.4.8 Defining the calibration settings

Standby > Configuration > Calibration settings

In this menu, you can define the settings for the calibration. The calibration is not introduced here.

Options	Value range (min./max.)	Comments
Units	e.g., mbar*l/s	The units for the calibration leak value. The units for the internal calibration leak are mbar*l/s and can not be changed.
Calibration leak value (internal/external)		Calibration leak value in the selected units. Depending on the selected calibration mode, this is either an external or internal calibration leak.
Operation mode "Calibration"	Int. auto	Internal calibration mode, automatic.
	Int. man.	Internal calibration mode, manual – the signal stability must be calibrated manually.
	External	

6.4.9 Setting the calibration request

Run-up > Configuration > Calibration settings > Calibration request

Specify whether the device displays a calibration request after standard events occur.

Option	Comments
YES	The calibration request is carried out. – 30 minutes after switching the device on - if the temperature in the device has changed by more than 5 °C since the last calibration.
No	The calibration request is not carried out.

6.4.10 Calibrating

In order to be able to measure leak rates correctly, the leak detector has to be adjusted at regular intervals by calibration. The mass spectrometer is adjusted automatically.

You can perform the calibration using the device internal calibration leak or using an external calibration leak. Normally, calibration should take place on a daily basis or if there is some doubt as to the measurement ability of the device.

NOTICE

When using hydrogen or helium-3 (^{3}He) as tracer gas an internal calibration is not possible. In this case, use an external calibration leak.

The operation modes "Vacuum" and "Sniffing" must be separately calibrated when using an external calibration.

A calibration should only take place when the device is at operating temperature. Calibrate at least 20 minutes after switch-on.

6.4.10.1 Calibrating in the operation mode "Vacuum"

Faulty calibration with a cold device

Let the device run for at least 30 minutes before you carry out the calibration.

Observe the recommended test interval for the calibration leak used! See the associated product description.

In the "Vacuum" operation mode, the device is calibrated with an internal or external calibration leak. An internal calibration is only possible for mass 4. The calibration mode is defined in the "Calibration settings" menu.

Internal calibration leak

For calibrating with the internal calibration leak, there are two variants.

- Internal automatic: For calibration with the internal calibration leak without volume at the inlet flange. The inlet flange must be empty.
- Internal manual: For calibration with the internal calibration leak with volume at the inlet flange. By pressing "Signal stable", it must be confirmed that a stable measurement signal is present.

1. Check whether the value on the display corresponds to the value on the calibration leak rating plate. If this is not the case, change the calibration leak value:

Run-up > Configuration > Calibration settings > Calibration leak and operation mode CAL

1. Connect the calibration leak to the inlet flange.
2. Open the calibration leak by opening the valve.
3. Press OK.

The preparations for the calibration with an external calibration leak are complete.
Connection of an external calibration leak for the partial flow

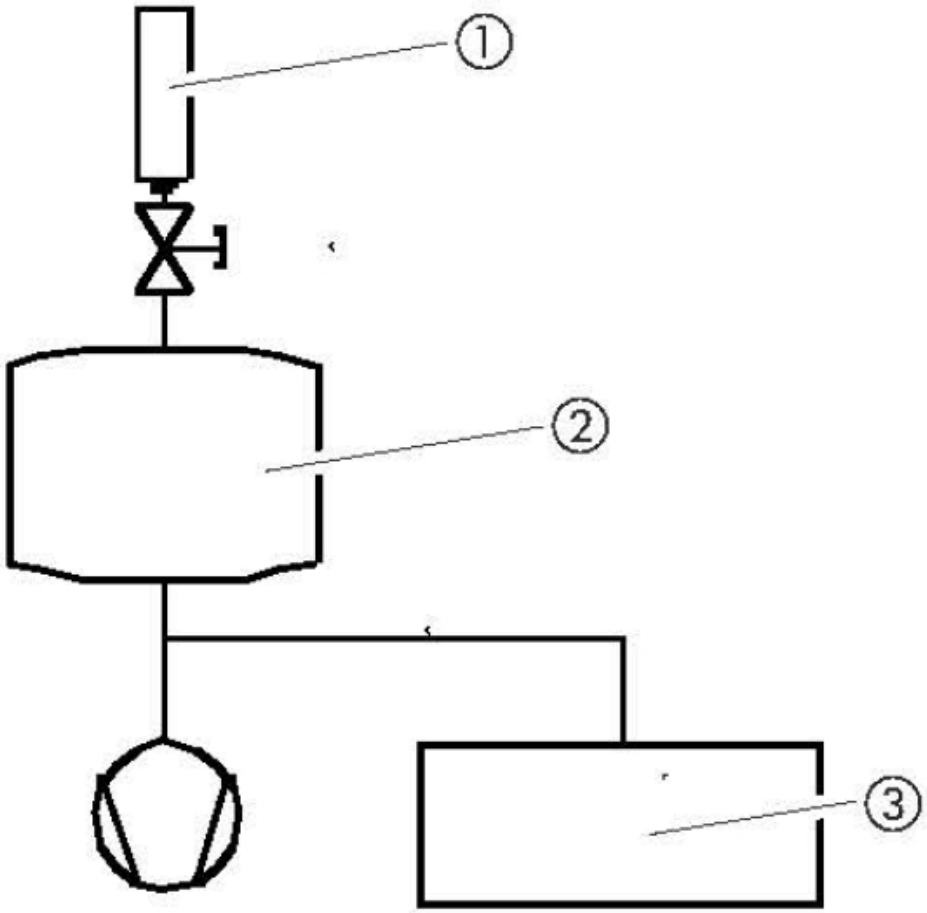

Fig. 14: External calibration, partial flow

1	Calibration leak	2	Test chamber
3	Leak detector		

If the device is connected to a vacuum system with an integrated vacuum pump, connect the calibration leak to its test container.

Calibration sequence

1. To start the calibration, select "Calibration" in the "Standby" window. The calibration runs through several steps, which are shown on the display. The first step is the evacuation.
2. Observe the progress of the calibration routine. Depending on the calibration variant, an action is requested on the part of the operator. Once the calibration routine is completed, the result is shown on the display.

Typical values for the calibration factor CF for ^{4}He:

Operation mode "ULTRA"	0.1 … 10
Operation mode "GROSS"	0.5 … 30

Values between 0.1 and 100 are possible.

If the overview displays a value in parentheses, the calibration leak value is too small for the measurement range. The factor was calculated using an intermediate factor for the next sensitive measurement range.

1. Accept or reject the calibration performed. To accept the result, select "Save". Otherwise, select "Cancel". If typical values are not reached despite repeated attempts, contact your nearest Linxon Service Center.

6.4.10.2 Calibrating in the operation mode "Sniffing"

NOTICE

Observe the recommended test interval for the calibration leak used! Also see the quality test certificate for the calibration leak.

1. For an optimal calibration, allow the device to warm up for at least 30 minutes. To start the calibration, select "Calibration" in the "Standby" window. The prompt appears on the display: Sniffing, calibration leak
2. Check if the displayed value corresponds to the value on the calibration leak rating plate. If this is not the case, change the calibration leak value in the "Calibration settings" menu.
3. Hold the sniffer line to the calibration leak.
4. Confirm this action with START.
5. Observe the progress of the calibration routine that is shown on the display. The first step is the evacuation. Perform the displayed operations. Once the calibration routine is completed, the result is shown on the display. A typical value for the calibration factor CF for ^{4}He is 0.1 ... 10.
6. Accept or reject the calibration performed. To accept the result, select "Save". Otherwise, select "Cancel".
7. If the typical values are not reached despite repeated attempts, contact your nearest Linxon Service Center

6.4.10.3 Checking the calibration using the internal calibration leak

This function is available for the "Vacuum" operation mode and with mass 4. For this measurement, the test port must be blind-flanged.

Standby > Calibration > Check internal calibration leak

1. Check if the test port is blind-flanged. If the test port is blind-flanged, proceed to the next step.
2. Press "Yes".

3. Press "START" to start the measurement for the internal calibration leak. The evacuation is initiated. The measurement of the internal calibration leak begins. The display shows the measured calibration leak value. The default value for the internal calibration leak (TL value) is also displayed.
   Cancel the measurement of the internal calibration leak with "Cancel".

If the measured value deviates from the target value, calibrate again.

Influences such as temperature or air pressure also have a minor influence on the measurement results for the internal calibration leak. Although the absolute accuracy of the measurement system can not be guaranteed, you can use the measurement results for the internal calibration leak as a reference.

6.5 Measuring

6.5.1 Measuring in the operation mode "Vacuum"

⚠ WARNING

Risk of injury due to suction at the test connection flange

In the vacuum mode, the device can draw in parts of the body that block the inlet flange.
Always use an inlet filter.

Keep body parts away from the inlet flange.

1. Connect all required accessories or devices. Remove the blank flange at the test port and establish the connection to the test object.
2. Check if the parameters displayed in the "Standby" window are correct. The device is ready when the "Standby" window appears on the display after the device starts up. Make sure that the device is in "Vacuum" operation mode.
3. In order to obtain the most precise measurement results possible, allow the device to warm up for approx. 30 minutes.
4. To start the measuring process, press "START" on the control unit. The test object is evacuated and the pressure is displayed during the pumping process. As soon as the measuring pressure is reached, the measurement view appears. If the background leak rate (< 1E-09 mbar l/s) is reached, then helium can be applied to the test object. The display shows the leak rate for the test object.
5. Press the "STOP" button to stop the measurement. The device switches back to "Standby" and the test object is vented.
6. Disconnect the test object from the device.
7. Connect the next test object.

6.5.2 Measuring in the operation mode "Sniffing"

⚠ CAUTION

Risk of electric shock

Suctioned fluids can trigger short circuits and cause material damage or injuries.

Do not suck up liquids into the device.

1. Connect all required accessories or devices. Make sure that a sniffer line is connected and the test port is free.

2. Check if the parameters displayed in the "Standby" window are correct. The device is ready when the "Standby" window appears on the display after the device starts up. Make sure that the device is set to the "Sniff" operation mode.
3. In order to obtain the most precise measurement results possible, allow the device to warm up for approx. 30 minutes.
4. To start the measuring process, press "START" on the control unit. The measurement window is displayed.
5. In order to take the background concentration of the tracer gas into consideration and suppress it during the measurements, keep the sniffer tip away from possible gas sources and press the ZERO button on the device or on the button on the handle briefly.
6. Hold the sniffer tip close to the possible leak source and sniff the test object. The tip must touch the test object. If you would like to test a weld or something similar, you must move the tip at a speed of less than 2.5 cm/s (1 in/s) along the path. When checking a spot, hold the sniffer line for at least 1 second.

If there is a leak, this is indicated in the display as well as by an acoustic signal, regardless of your settings.

6.5.3 Measurement view

Once the measuring pressure is reached, the measurement view appears with the most recently used display type:

- Analog/digital with bar graph and large format numbers or
- Graphic as a function of measuring time
- By using the lower right button, you can switch between the analog/digital display and the graphical display. This button alternately shows the analog display symbol and the graphical display symbol.

6.6 Calling up information about the device

You can call up various information about the state of the device. The information is shown on the display in the form of lists or graphics.

Run-up > Configuration > Information

- Settings
- System data
- Vacuum diagram
- Error list
- Calibration history

You can also locate the installed remote control using an acoustic signal:

Standby > Configuration > Information > Paging function

Settings

Run-up > Configuration > Information > Settings

The current settings for the device are listed in this menu. The settings can not be changed here.

System data

Standby > Configuration > Information > System data

The system data for the device are listed in this menu. The information is divided up as follows:

- PUMPS
- MASS SPECTROMETER
- TEMPERATURE & PRESSURE
- VARIOUS
- SERIAL INTERFACE
- DIGITAL INPUTS
- DIGITAL OUTPUTS

Vacuum diagram

Standby > Configuration > Information > Vacuum diagram

The graphical representation of the measurement system shows the following:

- the current switching state of the valves
- the background value
- the pressure of the backing pumps measured at the inlet of the backing pump (p1) and at the inlet flange (p2) by the measuring devices.

Error list

Standby > Configuration > Information > Error list

The error list shows the last 12 reported errors.

For each error, the dates and the time, the number of the error message and a part of a comment are displayed. One of the error messages is always selected. You can move the selection up or down using the buttons next to the arrow symbols. You can call up the complete message for the selected error message by pressing the magnifying glass symbol. This contains the error description as well as information on possible causes and corrective measures.

Calibration history

Standby > Configuration > Information > Calibration history

The calibration history shows the date, time, tracer gas, and calibration factor for the last 12 calibrations. Additional details are stored for the calibrations. To view details about a calibration, go to the path shown above.

Then select the following:

1. In order to select a certain calibration, use the buttons next to the symbols ↑ or ↓ to move the selection to the respective calibration.
2. In order to display the complete message, select the magnifying glass symbol.

Paging function

Standby > Configuration > Information > Paging function

1. Switch the paging function on or off. When the paging function is switched on, the remote control unit will send out an audible signal.

6.7 Calibrating with vacuum method

⚠ CAUTION

For optimal calibration, the device must be warmed up for at least 20 minutes.

Please observe the recommended test interval for the calibration leak used! See quality test result: Calibration leak.

In the vacuum mode, the device can be calibrated with an internal or external calibration leak. The internal calibration is only possible for mass 4.

Internal calibration leak

There are two ways to calibrate with an internal calibration leak:

- Automatic internal: For calibration with the internal calibration leak without volume at the inlet flange. For this purpose, the inlet flange must be blind-flanged.
- Manual internal: For calibration with the internal calibration leak in the presence of a volume at the inlet flange. Confirmation of a stable measurement signal by means of the "Signal stable" button is necessary.

External calibration leak

For a calibration leak, the following prompt appears: "External calibration: Connect and open external calibration leak".

Fig. 15: Checking an external calibration leak

1. Is the displayed value equal to the value on the rating plate of the calibration leak? Change if necessary!
2. Connect the calibration leak.
3. The valve of the calibration leak must be open.
4. Confirm with OK.

⚠ CAUTION

Part flow arrangement

If the device is connected to a vacuum system with its own pump, the calibration leak must be connected to its test container.

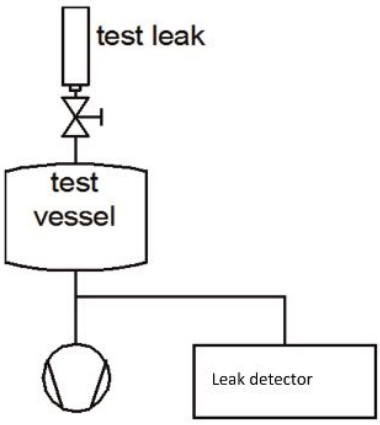

Fig. 16: Calibration

The calibration runs through the following sequences:

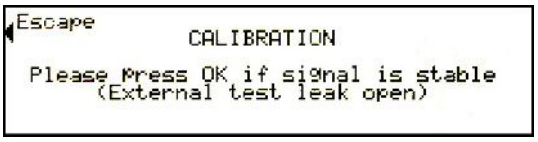

During a calibration with an external calibration leak or an internal calibration leak in the "Manual internal" mode, the stability of the signal must be confirmed using the "OK" button.

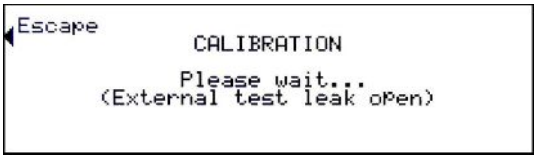

During a calibration with an external calibration leak, the following prompt appears:

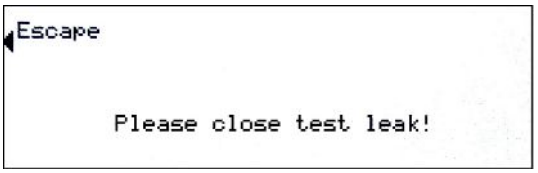

- Close calibration leak valve

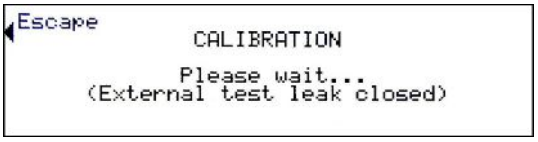

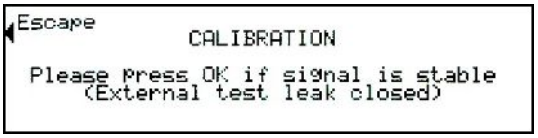

- When using tracer gas H_2, wait 5 minutes
- Confirm with OK

During a calibration with external tracer gas or internal tracer gas in the "Manual internal" mode, the stability of the signal must be confirmed using the OK button.

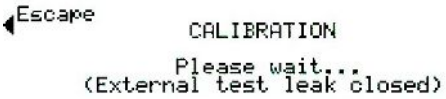

After the end of the calibration process, the result is displayed.

Common calibration factor value for ^{4}He	ULTRA	0.1 … 10
	FINE	0.1 … 10
	GROSS	0.5 … 30

Values between 0.1 and 100 are possible. A factor in parentheses means that the calibration leak is too small for this measurement range. The factor was calculated using an intermediate factor from the next sensitive measurement range. If you

- accept the result, press "Save" to save the new calibration values.
- do not accept the result, press "Cancel" to leave the old values in place.

If the common values cannot be reached despite multiple attempts, please contact your nearest Linxon Service Center.

6.8 Calibrating with sniff method

For optimal calibration, the device must be warmed up for at least 30 minutes.

Please observe the recommended test interval for the calibration leak used; see quality test result: Calibration leak.

Press "Calibration" in the "Ready" menu to start the calibration. The following prompt appears:

```
Escape
        EXTERNAL CALIBRATION
      Sniff external test leak!
```

Fig. 17: Sniff test on an external calibration leak

1. Is the value equal to the value on the rating plate of the calibration leak? Change if necessary!
2. Hold the sniffer line to the calibration leak.
3. Confirm this with START or with the button on the sniffer line.

Calibration sequence

The calibration runs through the following sequences:

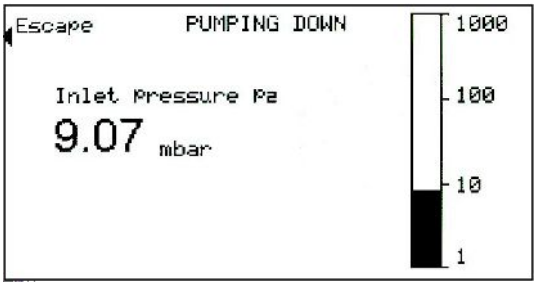


```
Escape
                CALIBRATION
 Please Press OK if signal is stable
      Sniff external test leak!
```

Confirm the stability of the signal with the OK button.

```
Escape
                CALIBRATION
                  Autotune
```

```
Escape
                CALIBRATION
              Please wait...
      Sniff external test leak!
```

Now the following prompt appears:

```
                Sniff air!
```

- Remove sniffer line from the calibration leak
- Confirm with OK or the button on the sniffer line

```
Escape
                CALIBRATION
 Please Press OK if signal is stable
                Sniff air!
```

After the end of the calibration process, the result is displayed.

```
Escape          CALIBRATION
                 COMPLETED!

                          Old      New
 Anode Potential.......:  466V     471V
 FINE  CAL-Fac.........:   1.0      1.0

                                   Save
```

The usual calibration factor value CF for 4He is 0.1 … 10. If you

- accept the result, press "Save" to save the new calibration values
- do not accept the result, press "Cancel" to leave the old values in place.

If the common values cannot be reached despite multiple attempts, please contact your nearest Linxon Service Center.

6.9 Check internal calibration leak

Standby > Calibration > Check internal calibration leak

This function is only available for the "Vacuum" operation mode with mass 4. After the device has started up, the display goes into the "Standby" operation mode.

Pressing the "Check internal calibration leak" button leads to the submenu:

1. The inlet flange must be blind-flanged! Confirm with "Yes".
2. Confirming the START button leads to evacuation and the beginning of the calibration leak measurement.

In addition to the display of the measured calibration leak value, the display also shows the default value for the internal test leak: for example, TL: 8.6E-07 mbar l/s.

In all cases, the "Cancel" button leads back to the "Ready" menu.

NOTICE

Matching the measured value of the internal calibration leak with the standard value of the internal calibration leak does not confirm the absolute accuracy of the measurement system if an internal calibration leak was used to calibrate the leak detector.

The display for the internal test leak may only be used as a reference! Accurate measurements require calibration with an external calibration leak.

6.10 Switching off the device

You can switch off the device with the power supply switch at any time. The parameters set in the device remain saved.

7 Warning and error messages

During operation, the display shows information that helps you operate the instrument. Measurement values are displayed along with current unit modes, operating instructions as well as warnings and error messages. The instrument is equipped with extensive self-diagnostic functions. If the electronics detect a faulty state, the device will show this as far as possible on the display and will interrupt operation when necessary. Warning and error messages consist of a number, a descriptive text, and often an associated measured value (e.g., a measured voltage).

Warnings

Warnings warn of instrument modes that can impair the accuracy of measurements. Operation of the instrument is not interrupted.
For details about the cause and remedy, press "Warning/Error".
To close a warning message, press "Standby" after reading.

Error messages

Errors are events that force the interruption of the operation.
For details about the cause and remedy, press "Warning/Error".
Once you have found the cause for the error, resume operation by pressing the "Standby" button.

Active errors and warnings

This menu item is only displayed when the template contains errors or warnings:

Confirmed warnings

If an active warning is acknowledged without rectifying the cause, it is displayed under "Confirmed warnings".

Reference on the display

An overview of possible errors and warnings can be found at:

No. of the error message	Displayed message	Description and possible remedy for the cause
E21	Suppressor voltage reference value too high.	• The suppressor voltage has been affected by a short circuit. • MSV is defective.
E22	Setpoint of the anode potential is too high!	Brief increase in pressure in the mass spectrometer. Valve contamination causes high mass spectrometer pressure. • The anode voltage is short-circuited. • The nominal value for the anode voltage is too high. The anode voltage is limited to 1,200 V.
E23	Suppressor test incorrect!	• MSV board defective • Preamplifier defective • Suppressor cable defective

No. of the error message	Displayed message	Description and possible remedy for the cause
E24	24 V supply voltage at MSV board is too low!	• Fuse F1 on the MSV board is blown. • MSV board defective • 24 V supply voltage from power supply unit too heavily stressed or faulty.
E25	Filament current is too high!	• MSV board defective.
E26	Filament current is too low!	• MSV board defective • Defective ion source connector or cable.
E27	Emission fail	• Inrush of air • Valves contaminated • Filament failure while in measuring mode
E28	Emission cannot be switched on for both filaments!	• Both filaments are defective. Replace ion source. • Defective ion source connector. • MSV board defective
E29	The anode potential has exceeded its nominal value by over 10%.	• MSV is defective. • MC 68 defective
E30	The anode potential has dropped below its nominal value by over 10%.	• Brief increase in pressure in the mass spectrometer. • MSV is defective. • MC 68 defective
E31	Anode/cathode voltage is too high!	Anode-cathode voltage is greater than U > 130 V. • MSV is defective.
E32	Anode/cathode voltage is too low!	Anode-cathode voltage is less than U < 30 V. • Fuse F4 on MSV board is defective • MSV is defective.
E33	Suppressor potential too high.	Suppressor potential is greater than 363 V. • MSV is defective
E34	Suppressor potential too low.	Suppressor potential is less than U < 297 V. • Short circuit in the suppressor line. • MSV is defective. • High ohmic short circuit in the ion collector.

No. of the error message	Displayed message	Description and possible remedy for the cause
E35	24 V at OPTION output is too high	The 24 V for the external outputs I/O; RS485; GAUGE HEAD is too high. (U > 30 V) • Check the external feed of the 24 V outputs. • Power supply unit defective
E36	24 V at OPTION output is too low	The 24 V for the external outputs I/O; RS485; GAUGE HEAD is too low. (U < 20 V) • Fuse F1 on I/O board defective. • Power supply unit defective
E37	24 V power supply for the remote control is too low (< 20 V)	The 24 V for the external RC outputs and fans 1+2 is too low. (U < 20 V) • Fuse F2 on I/O board defective. • Power supply unit defective
E39	Temperature at electronic unit is too high! (>60°C)	• The ambient temperature is too high. • Unfavorable position of the leak detector. (Heat build-up) • Fan failed. • Air filter too heavily contaminated. • Temperature sensor defective.
E41	TMP frequency is too low!	The target speed (1450 Hz) of the turbo molecular pump (TMP) was not reached within 5 min. • Initial pressure of the TMP is too high. • Turbo molecular pump is defective. • Electronic drive unit TC 110 is defective.
E42	Emission off (p1 too high)	• Inrush of air • Valve V1 leaking.
E43	Emission off (p2 too high)	Emission is switched off during normal operation of the leak detector when the pressure in GROSS is p2 > (GROSS pressure threshold + 5 mbar) or in FINE is p2 > (FINE pressure threshold + 1 mbar) or

No. of the error message	Displayed message	Description and possible remedy for the cause
		in ULTRA is p2 > (ULTRA pressure threshold + 0.1 mbar)
E49	Output voltage of the external pressure gauge is too high.	• Sensor of the pressure measuring point is defective • Electronics pressure measuring point is defective
E50	Output voltage of the external pressure gauge is too small.	• Check cable for pressure measuring point • Sensor for pressure measuring point short to ground • Electronics pressure measuring point is defective
E51	Characteristic impedance of the external pressure gauge is too small.	Characteristic impedance of the external pressure measuring point is too small. • Check cable for pressure measuring point • Incorrect external pressure measuring point used • Electronics pressure measuring point is defective • Input is short-circuited
E52	Inlet pressure p2 too low!	The output voltage of pressure measuring point P2 is too small • Check cable to Pirani sensor • Pirani sensor is defective • Sensor electronics I/O board is defective
E54	Foreline pressure p1 too low!	The output voltage of pressure measuring point P1 is too small • Check cable to Pirani sensor • Pirani sensor is defective • Sensor electronics I/O board is defective
E56	p1 > 10 mbar after run-up	The foreline pressure P1 is > 10 mbar after 5 min. in run-up • Backing pump is defective • Leaks in the vacuum system • Valve V1 does not open

No. of the error message	Displayed message	Description and possible remedy for the cause
E60	TMP frequency is too high (E001)!	Nominal speed of 1500 Hz exceeded by 5%. • Check connecting cable, restart leak detector • TC 110 is defective
E61	TMP power supply unit is defective (E002)!	Error detected in the power supply unit TC 110. • Power supply unit is defective (TMP drive electronics)
E62	TMP start-up time error (E006)!	Speed of the TMP is below the speed switching point < 1200 Hz 15 min. after starting. • Turbo pump bearing damage • TC 110 is defective
E63	TMP connection TC to pump is defective (E008)!	TMP connection between TC 110 and TMP is defective • Verify that the TC 110 is correctly mounted on the TMP • TC 110 defective
E64	TMP controller in the TC is defective (E015)!	TMP controller TC 110 detected as defective. • Replacing the TC 110
E65	TMP wrong pump resistance (E021)!	TMP controller detects the wrong pump characteristic impedance • Replace the TMP
E66	TMP motor controller is defective (E037)!	The controller of the TMP motor is defective. • Replace the TMP • Replacing the TC 110
E68	No communication with turbo pump.	No communication via the RS 485 between TC 110 and MC 68 control board • Connection is faulty or not plugged in TC 110 – wiring level • TC 110 defective • MC 68 is defective
E70	The offset voltage of the preamplifier is too high. (> 5 mV)	• The preamplifier is defective. • Incorrect power supply to preamplifier

No. of the error message	Displayed message	Description and possible remedy for the cause
E71	TMP temperature control faulty	• Short circuit in the temperature sensor
E72	TMP temperature sensor faulty	• Temperature sensor is interrupted

Table 7: Error messages

No. of the warning message	Displayed message	Description and possible remedy for the cause
W69	TMP fault	Unknown error
W101	Real-time clock was reset! Please enter date and time.	• Battery on the MC 68 control board is discharged/defective • MC 68 has been replaced
W102	Please recalibrate the device!	The automatic calibration request is activated and one of the following conditions is fulfilled: • 30 minutes have elapsed since the leak detector was switched on • The preamplifier temperature has changed by more than 5 °C since the last calibration • The mass setting has been changed • The filament has been switched over After confirmation of this warning message, a warning triangle will remain in the "Ready" menu, indicating the presence of this fault. Only if this fault is eliminated will this warning triangle disappear.
W103	Flow through capillary is too low!	• Filter in filter tip is clogged • Sinter filter in filter tip is soiled • Capillary is clogged by dirt • Lower flow limit is set incorrectly

No. of the warning message	Displayed message	Description and possible remedy for the cause
		After confirmation of this warning message, a warning triangle will remain in the "Ready" menu, indicating the presence of this fault. Only if this fault is eliminated will this warning triangle disappear.
W104	Capillary broken	• Capillary broken or torn • Upper flow limit is set incorrectly After confirmation of this warning message, a warning triangle will remain in the "Ready" menu, indicating the presence of this fault. Only if this fault is eliminated will this warning triangle disappear.
W105	Global Reset	A global reset has been performed.
W106	Default settings loaded!	The factory settings have been loaded by the device software.
W107	Service interval has expired!	• Perform service on the backing pump • Perform service on the TMP After confirmation of this warning message, a warning triangle will remain in the "Ready" menu, indicating the presence of this fault. When maintenance is complete, the service interval can be reset in the menu under ”Maintenance & service" (device - maintenance interval).
W108	ZERO function is blocked.	The ZERO function has been blocked in the Settings menu, but activated through the PLC input.
W109	Preamplifier signal is too large (> 10 V)	The preamplifier signal is overmodulated in the least sensitive measurement range. • Preamplifier defective • Mass spectrometer is heavily soiled
W120	Time-out during calibration	Pressure threshold for following measurement range is not reached within the set time limit. The time limit is specified by the set maximum evacuation time in the configuration menu.
W121	The calibration leak signal is too small!	• The calibration leak used for the calibration is too small.

No. of the warning message	Displayed message	Description and possible remedy for the cause
		• The external calibration leak valve is not open or defective. • Internal calibration leak is defective
W122	Signal is unstable during calibration!	• Leak rate signal too small and noisy • Internal calibration leak is defective • Backing pump has highly unstable final pressure
W123	Peak out of tuning range!	• Leak rate signal was unstable during the mass adjustment. Re-calibrate. • Check internal calibration leak and repeat the calibration with an external calibration leak.
W124	Signal difference between opened and closed calibration leak is too small.	• Internal calibration leak is defective. • The external calibration leak valve is defective or not closed. • The calibration leak used for the calibration is too small.
W125	Calibration factor too low	The calculated calibration factor is outside the permissible range (< 0.1). The old factor is retained. • The calibration leak is defective. • The leak rate value entered for the calibration leak is much too small. • The conditions necessary for calibration have not been satisfied.
W126	Calibration factor too high!	The calculated calibration factor is outside the permissible range (> 100). The old factor is retained. • The calibration leak is defective or empty. • The calibration leak value entered for the calibration leak is too large. • Mass spectrometer soiled and non-sensitive. • The conditions necessary for calibration have not been satisfied.

No. of the warning message	Displayed message	Description and possible remedy for the cause
W130	Preamplifier temperature is too low. (<2 °C)	• The ambient temperature is too low. • The temperature sensor in the preamplifier is defective. • Preamplifier cable is defective. After confirmation of this warning message, a warning triangle will remain in the "Ready" menu, indicating the presence of this fault. Only if this fault is eliminated will this warning triangle disappear.
W131	Preamplifier temperature is too high. (>60 °C)	• The ambient temperature is too high. • The air filter is soiled. • Heat build-up due to unfavorable position • Temperature sensor in the preamplifier defective. After confirmation of this warning message, a warning triangle will remain in the "Ready" menu, indicating the presence of this fault. Only if this fault is eliminated will this warning triangle disappear.
W132	Temperature at the electronic unit is too low (< 2 °C).	• Ambient temperature too low • Temperature sensor is defective After confirmation of this warning message, a warning triangle will remain in the "Ready" menu, indicating the presence of this fault. Only if this fault is eliminated will this warning triangle disappear.
W133	Temperature at electronic unit is too high! (>55 °C)	• The ambient temperature is too high. • Unfavorable position of the leak detector. (Heat build-up) • Fan failed. • Air filter too heavily contaminated. • Temperature sensor defective. After confirmation of this warning message, a warning triangle will remain in the "Ready" menu, indicating the presence of this fault. Only if this fault is eliminated will this warning triangle disappear.

No. of the warning message	Displayed message	Description and possible remedy for the cause
W135	Emission of filament 1 cannot be switched on.	• Filament 1 is defective • Defective ion source connector or cable. • MSV board defective.
W136	Emission of filament 2 cannot be switched on!	• Filament 2 is defective • Defective ion source connector or cable. • MSV board defective.
W140	EEPROM write timeout	The write command from the MC 68 to the EEPROM has not been acknowledged. • EEPROM defective. • Error at the wiring level • MC 68 defective.
W141	EEPROM parameter queue overflow	Software problem. Please contact the Service department!
W142	All EEPROM parameters lost! Please check your settings!	EEPROM on wiring board is empty and was initialized with default values. All parameters must be re-entered or determined. • If the warning occurs again after switching back the leak detector, the EEPROM on the wiring board is probably defective. • Wrong EEPROM type used. • New EEPROM is used.
W143	EEPROM parameters lost! Please check the settings!	Missing or invalid parameter value in the EEPROM after switching on the leak detector. • EEPROM cannot be described. EEPROM defective. • MC 68 control board is defective • Line connection to EEPROM is interrupted • Wrong EEPROM type is used
W145	x EEPROM parameters installed! Please check the settings!	Missing or changed parameter in the EEPROM and new software version number determined.

No. of the warning message	Displayed message	Description and possible remedy for the cause
		• A software update has been performed and one or more new parameters determined. The message can be confirmed in this case. The parameter(s) is (are) automatically initialized.
W152	No external pressure sensor detected!	No external pressure sensor has been detected. • Ext. External measuring tube selected in the menu, but not connected or cable is defective • Ext. pressure sensor defective. Characteristic impedance not detected.
W160	Leak rate too high! Switched to the "Standby" mode to prevent contamination!	The monitor function "Contamination protection" is activated and a leak rate above the set limit value has been detected. • Gross leak. • Switch-off limit value too low. • Alarm delay set too short.
W161	Maximum evacuation time exceeded!	Within the set evacuation time, the "Measuring" state has not been reached. • Evacuation time is adapted incorrectly to the sample volume. • DUT has a gross leak. • Switching pressures set incorrectly.

Table 8: Warnings

8 Cleaning and maintenance

All cleaning and maintenance work described here must be carried out without opening the side walls!

⚠ WARNING

Life threatening hazard from electric shock

High voltages are inside the device. Touching parts where electrical voltage is present can result in death.

- Disconnect the device from the power supply prior to any installation and maintenance work.Ensure that the electrical supply cannot be switched back on unintentionally.
- Do not open the side walls of the device!

Cleaning the housing

Wipe the housing with a soft damp cloth.

Use only water to moisten. Avoid cleaners that contain alcohol, fat or oil.

Make sure that the rating plate is preserved.

8.1 Cleaning/replacing the filter mat for fan 1

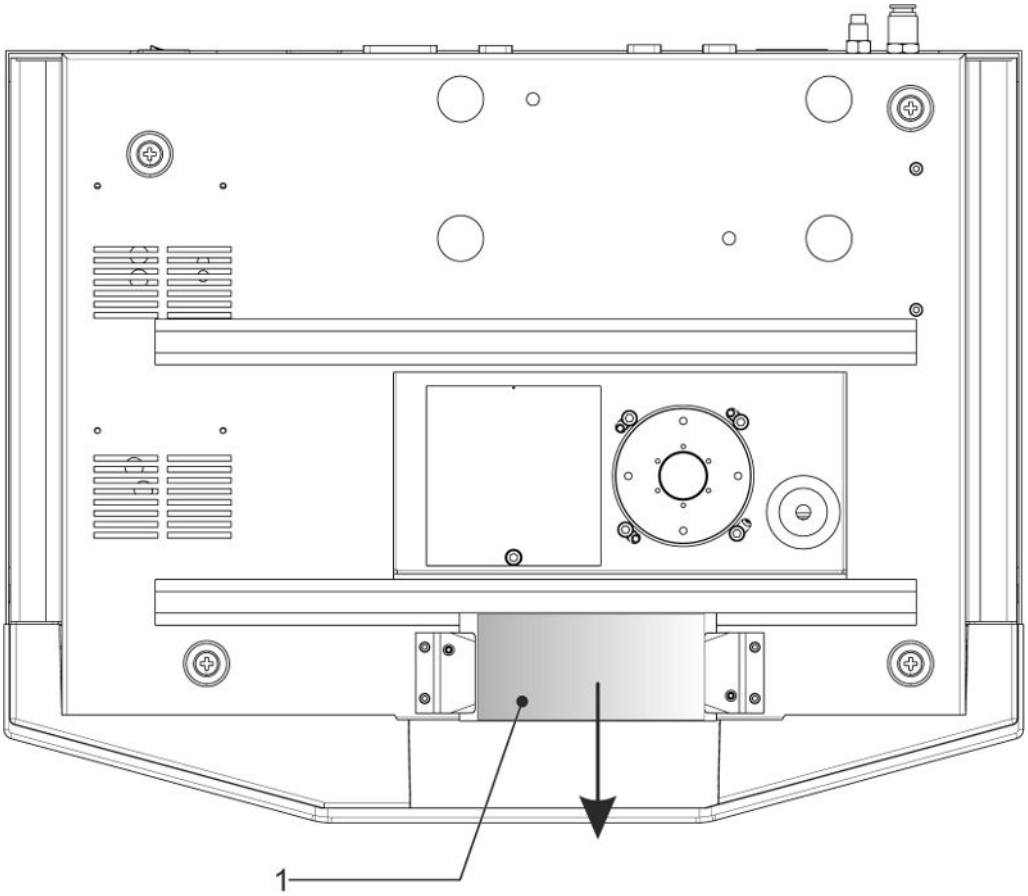

1	Filter mat

Depending on the operating conditions, the recommended inspection interval for the filter mat varies between weekly and annually. The filter plate for fan 1 can be reached from the front of the device and replaced without tools.

- To clean or replace the filter mat, pull the filter mat forward and out.
- Clean the filter with compressed air.
- Replace the filter if heavily soiled.

8.2 Replacing power fuses

⚠ CAUTION

Caution: Supply voltage

Improperly fused products can be life-threatening. Only use fuses with the values given in the instructions!

1. Switch off the device and disconnect it from the power.
2. Unplug the power cable.
3. Pry open the fuse holder.

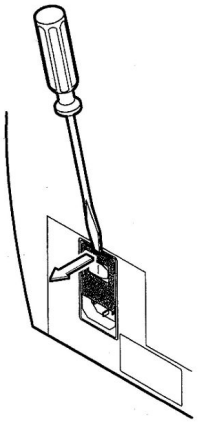

Fig. 18: Open

Remove both fuse holders and replace defective (10.0 A slow-blowing, 250 V, Ø 5 x 20 mm) fuses.

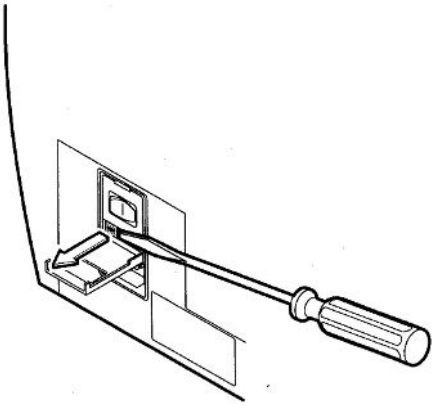

Fig. 19: Removing fuses

1. Snap the fuse holders back into place.
2. Close the cover.
3. Reconnect the power cable.

9 Decommissioning the measuring instrument

9.1 Sending in the device

⚠ WARNING

Danger due to harmful substances

Contaminated devices could endanger the health. The contamination declaration serves to protect all persons who come into contact with the device.

- Fill in the declaration of contamination completely.

1. Contact Linxon before making a return shipment and send a completed contamination declaration.

   ⇨ You will then receive a return number.

2. Use the original packaging when returning.
3. Before sending the device, attach a copy of the completed contamination declaration. See below.

Declaration of Contamination

The service, repair, and/or disposal of vacuum equipment and components will only be carried out if a correctly completed declaration has been submitted. Non-completion will result in delay.
This declaration may only be completed (in block letters) and signed by authorized and qualified staff.

1 Description of product

Type _____
Article Number _____
Serial Number _____

2 Reason for return

_____
_____
_____

3 Operating fluid(s) used (Must be drained before shipping.)

_____
_____

4 Process related contamination of product:

toxic	no ❑ 1)	yes ❑
caustic	no ❑ 1)	yes ❑
biological hazard	no ❑	yes ❑ 2)
explosive	no ❑	yes ❑ 2)
radioactive	no ❑	yes ❑ 2)
other harmful substances	no ❑ 1)	yes ❑

The product is free of any substances which are damaging to health yes ❑

1) or not containing any amount of hazardous residues that exceed the permissible exposure limits

2) Products thus contaminated will not be accepted without written evidence of decontamination!

5 Harmful substances, gases and/or by-products

Please list all substances, gases, and by-products which the product may have come into contact with:

Trade/product name	Chemical name (or symbol)	Precautions associated with substance	Action if human contact

6 Legally binding declaration:

I/we hereby declare that the information on this form is complete and accurate and that I/we will assume any further costs that may arise. The contaminated product will be dispatched in accordance with the applicable regulations.

Organization/company _____
Address _____ Post code, place _____
Phone _____ Fax _____
Email _____
Name _____

Date and legally binding signature _____

Company stamp

Copies:
Original for addressee - 1 copy for accompanying documents - 1 copy for file of sender

10 Accessories

Filter mats (5 pieces)	200008452

Table 9: Basic unit

RC1000 WL remote control (wireless)	551-015
RC1000 remote control (with cable)	551-010

Table 10: Remote control unit

Sniffer line with standard tip	
Sniffer line, 3 m	551-300
Sniffer line, 5 m	551-301
Sniffer line, 10 m	551-302
Sniffer tips	
ST 385 (385 mm, fixed)	12215
ST 312 (120 mm, flexible)	12214
ST 385 (385 mm, flexible)	12216

Table 11: Sniffer line

Pirani PSG 500 with connecting cable	350-060

Table 12: Measuring instrument

10.1 Appendix

Remote control RC1000(WL)

As the operating unit for the device, the RC1000 WL remote control is a display and control element; measured values can be recorded in an internal memory for up to 24 hours.

It offers the advantage of easy wireless operation of the leak detector from a distance of up to 100 m and can also be connected via a cable to the leak detector. (Also see the RC1000 WL/RC1000 instruction manual)

1. POWER button – Switches the RC1000 WL remote control on and off.
2. ZERO button - ZERO activates the background suppression in the measuring mode. Pressing the button for more than 3 seconds deactivates the background suppression.
3. Touch display - The touch display offers extensive functions for visualization, operation and configuration. Measured values can be displayed numerically or as a curve. The functions are easy to operate with the soft buttons.
4. START button, STOP button – The measurement operation of the leak detector is started with the START button and stopped with the STOP button.
5. LED operation – Signals operation of the remote control by flashing.
6. LED charge indicator – Lights up while the battery is being charged.

The remote control is an optional accessory, therefore it is not part of the standard scope of delivery.

11 Appendix

11.1 Menu path

Pressing the navigation button brings you back to the measurement display regardless of whether you were previously in a menu or sub-menu.

11.1.1 Run-up

Run-up > Language

Run-up > Configuration

Run-up > Information

11.1.2 Standby

Standby > Operation mode Sniffing

Standby > Configuration > Setpoint and alarm

11.1.2.1 Configuration

Global settings

Display settings

Standby > Configuration > Global settings > Display settings > Contrast

Standby > Configuration > Global settings > Display settings > Units

Standby > Configuration > Global settings > Display settings > Date and time

Standby > Configuration > Global settings > Display settings > Display area

Standby > Configuration > Global settings > Display settings > Lower display limit

Standby > Configuration > Global settings > Display settings > Language

Access control

Standby > Configuration > Global settings > Access control > Maintenance activated

Standby > Configuration > Global settings > Access control > Access to the CAL function

Standby > Configuration > Global settings > Access control > Change device PIN

Standby > Configuration > Global settings > Access control > Change menu PIN

Maintenance and service

Standby > Configuration > Global settings > Maintenance and Service > Device maintenance

	Standby > Configuration > Global settings > Maintenance and Service > Maintenance warning
	Standby > Configuration > Global settings > Maintenance and Service > Burn-in
	Standby > Configuration > Global settings > Maintenance and Service > Maintenance components
	Standby > Configuration > Global settings > Maintenance and Service > View maintenance interval list
	Standby > Configuration > Global settings > Maintenance and Service > Service
Interfaces	Standby > Configuration > Global settings > Interfaces > Analog output
	Standby > Configuration > Global settings > Interfaces > External measuring device
	Standby > Configuration > Global settings > Interfaces > Control location
	Standby > Configuration > Global settings > Interfaces > Relays
	Standby > Configuration > Global settings > Interfaces > Serial interface
	Standby > Configuration > Global settings > Interfaces > Start pump
Loading/saving parameters	Standby > Configuration > Global settings > Load/save parameters > Load "PARA SET 1"
	Standby > Configuration > Global settings > Load/save parameters > Load "PARA SET 2"
	Standby > Configuration > Global settings > Load/save parameters > Save "PARA SET 1"
	Standby > Configuration > Global settings > Load/save parameters > Save "PARA SET 2"
	Standby > Configuration > Global settings > Load/save parameters > Load default settings
Volume and beeping	Standby > Configuration > Global settings > Beep volume

Information

Run-up > Configuration > Information > Settings

Standby > Configuration > Information > System data

Standby > Configuration > Information > Vacuum diagram

Standby > Configuration > Information > Error list

Standby > Configuration > Information > Calibration history

Standby > Configuration > Information > Paging function

Calibration settings

Run-up > Configuration > Calibration settings > Access to CAL function

Run-up > Configuration > Calibration settings > Calibration request

Run-up > Configuration > Calibration settings > Calibration leak and operation mode CAL

Calibration settings

Standby > Configuration > Test settings > Operation mode & mass

Standby > Configuration > Test settings > Filter & ZERO

Standby > Configuration > Test settings > Vacuum ranges

Standby > Configuration > Test settings > Evacuation time & ventilation

Standby > Configuration > Test settings > Gross leak protection

Standby > Configuration > Test settings > Pressure limits for sniffing mode

11.1.2.2 Calibration

Standby > Calibration > Background reassessment

Standby > Calibration > Check internal calibration leak

11.2 CE Declaration of Conformity

INFICON

CE

EU Declaration of Conformity

We – INFICON GmbH - herewith declare that the products defined below meet the basic requirements regarding safety and health and relevant provisions of the relevant EU Directives by design, type and the versions which are brought into circulation by us.

In case of any products changes made without our approval, this declaration will be void

The products meet the requirements of the following Directives:

- ***Directive 2014/30/EU (Electromagnetic Compatibility)***
- ***Directive 2006/42/EC (Machinery)***
- ***Directive 2011/65/EC (RoHS)***

Designation of the product:

LINXON Leak Detector

Models: **LX218**

Applied harmonized standards:

- ***EN 61010-1:2011***
- ***EN 61326-1:2013***
  Class A according to EN 55011
- ***EN ISO 12100:2010***
- ***EN 50581:2013***

Catalogue numbers:

8200-000, 8200-001
8200-002, 8200-003
8200-004

Authorised person to compile the relevant technical files:
René Bausch, INFICON GmbH, Bonner Strasse 498, D-50968 Cologne

Cologne, July 26th, 2019

Dr. Döbler, President LDT

Cologne, July 26th, 2019

i.A.

Bausch, Research and Development

INFICON GmbH
Bonner Strasse 498
D-50968 Cologne
Tel.: +49 (0)221 56788-0
Fax: +49 (0)221 56788-90
www.inficon.com
E-mail: leakdetection@inficon.com

Index

C

Calibrating
Starting position 52
Cleaning works 77
Connecting the sniffer line 13

D

Declaration of Contamination 80, 81

F

Function description 13

M

Maintenance 77

O

Operation mode "Vacuum" 13
O-Ring with filter 19

R

Return 80

S

Switch OFF 65
Switching on 36

LINXON